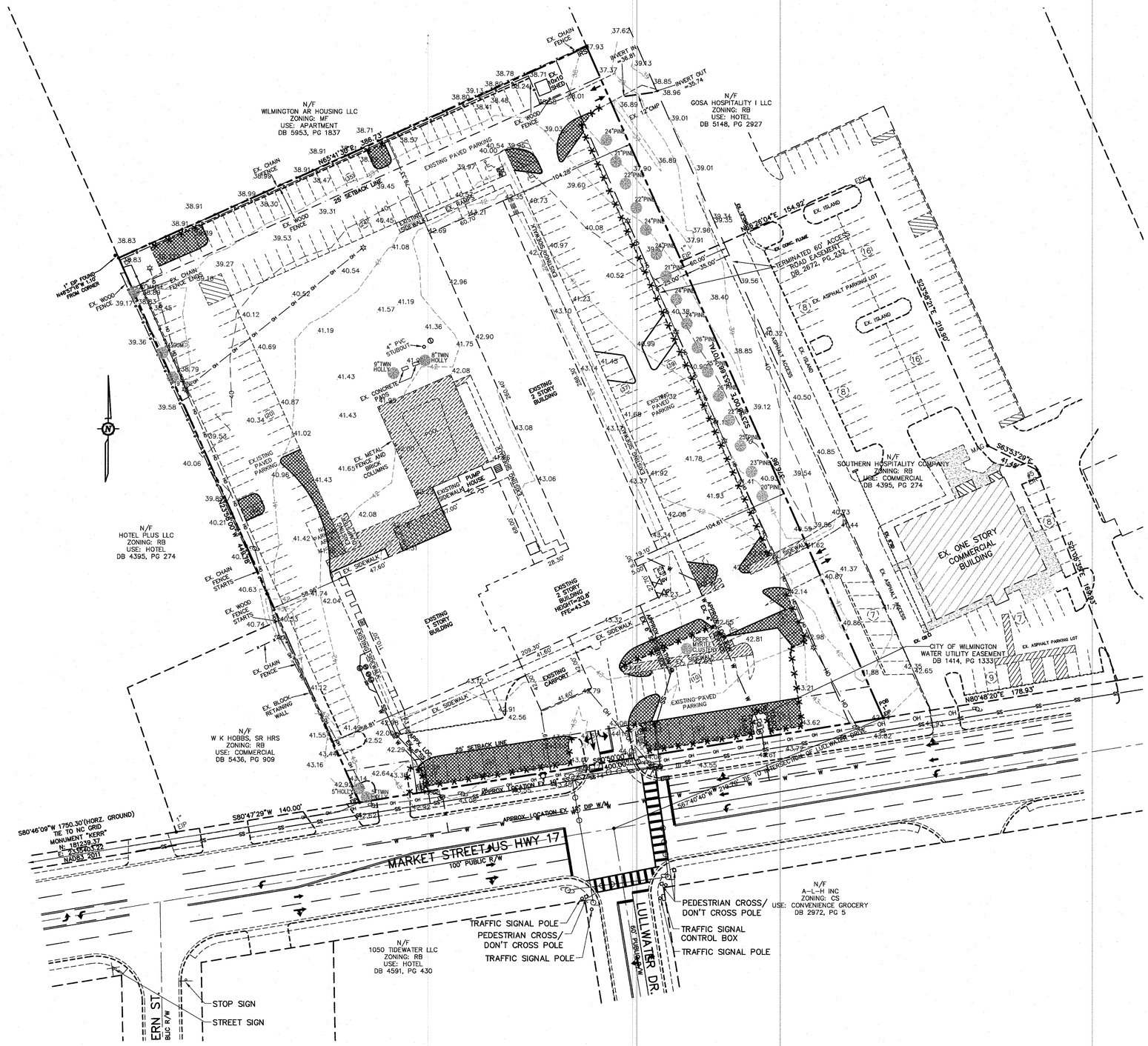

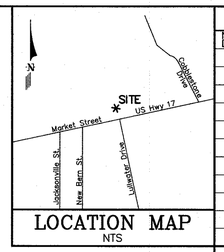

LOCATION MAP
NTS

REVISIONS		
No./ Date	Description	By

SITE INVENTORY NOTES:

1. PREPARER OF THE PLAN: TRIPP ENGINEERING, P.C.
2. APPLICANT NAME: SERAI ENTERPRISES, INC.
3. SITE ADDRESS OF THE DEVELOPMENT: 5001 MARKET STREET
4. PROPERTY OWNER: SERAI ENTERPRISES, INC.
5. DEVELOPER: SERAI ENTERPRISES, INC.
6. PROPERTY BOUNDARY: SEE PLAN
   TAX PARCEL INFORMATION: R04915-001-010-000
7. PROPERTY ZONING: RB; REGIONAL BUSINESS DISTRICT
8. ADJACENT PROPERTY OWNER INFORMATION: SEE PLAN
9. VICINITY MAP: SEE PLAN
10. TOPOGRAPHY: SEE PLAN
11. 100-YEAR FLOOD BOUNDARY: N/A
12. EXISTING DITCHES, CREEKS AND STREAMS: NONE
13. SOIL: Ur; URBAN LAND AND Se; SEAGATE FINE SAND
14. CAMA AEC: N/A
15. CAMA LAND CLASSIFICATION: URBAN
16. CONSERVATION RESOURCES: NONE
    ASSOCIATED SETBACKS: N/A
17. HISTORIC OR ARCHAEOLOGICAL SITE: N/A
18. CEMETERIES, BURIAL SITES/GROUNDS: N/A
19. FORESTED AREAS, HABITAT AND DOMINANT SPECIES: N/A
20. WETLANDS: NONE
21. PROTECTED SPECIES OR HABITAT: N/A
22. EXISTING OR PROPOSED THOROUGHFARES, BIKE ROUTES, PEDESTRIAN SIDEWALKS OR TRAILS AND TRANSIT FACILITIES: SEE SITE PLAN
23. EXISTING TREES: SEE PLAN

LEGEND

- PROPERTY BOUNDARY
- LIGHT POLE
- CURB INLET
- UTILITY POLE
- OVERHEAD WIRE
- GAS ASSEMBLY
- TRAFFIC BOX
- WATER METER
- DROP INLET
- GUY WIRE
- SANITARY SEWER MANHOLE
- SEPTIC CLEANOUT
- BACKFLOW PREVENTER
- FIRE HYDRANT
- SIGN
- LARGE SIGN
- ELECTRIC APPARATUS
- UTILITY BOX
- IRRIGATION CONTROL VALVE
- ASPHALT/DEMO TO BE REMOVED
- DEMO

CITY OF WILMINGTON NORTH CAROLINA
Public Services • Engineering Division
APPROVED STORMWATER MANAGEMENT PLAN
Date: _____ Permit #_____
Signed: _____

Approved Construction Plan	
Name	Date
Planning	
Traffic	
Fire	

For each open utility cut of City streets, a $325 permit shall be required from the City prior to occupancy and/or project acceptance.

SITE PLAN

BAR SCALE 1"=40'

40' 20' 0' 40' 80' 120'

SITE INVENTORY PLAN

TRU & TAPESTRY HOTEL

5001 MARKET STREET
WILMINGTON, NORTH CAROLINA

TRIPP ENGINEERING, P.C.
419 Chestnut Street
Wilmington, North Carolina 28401
Phone 910-763-5100
Fax 910-763-5631
© 2014 TRIPP ENGINEERING, P.C.

NORTH CAROLINA PROFESSIONAL SEAL 17374 ENGINEER PHILLIP GREGORY TRIPP

7.5.19

DATE	02-05-19
DESIGN	PGT
DRAWN	JET

C1

SHEET 1 OF 5

17068

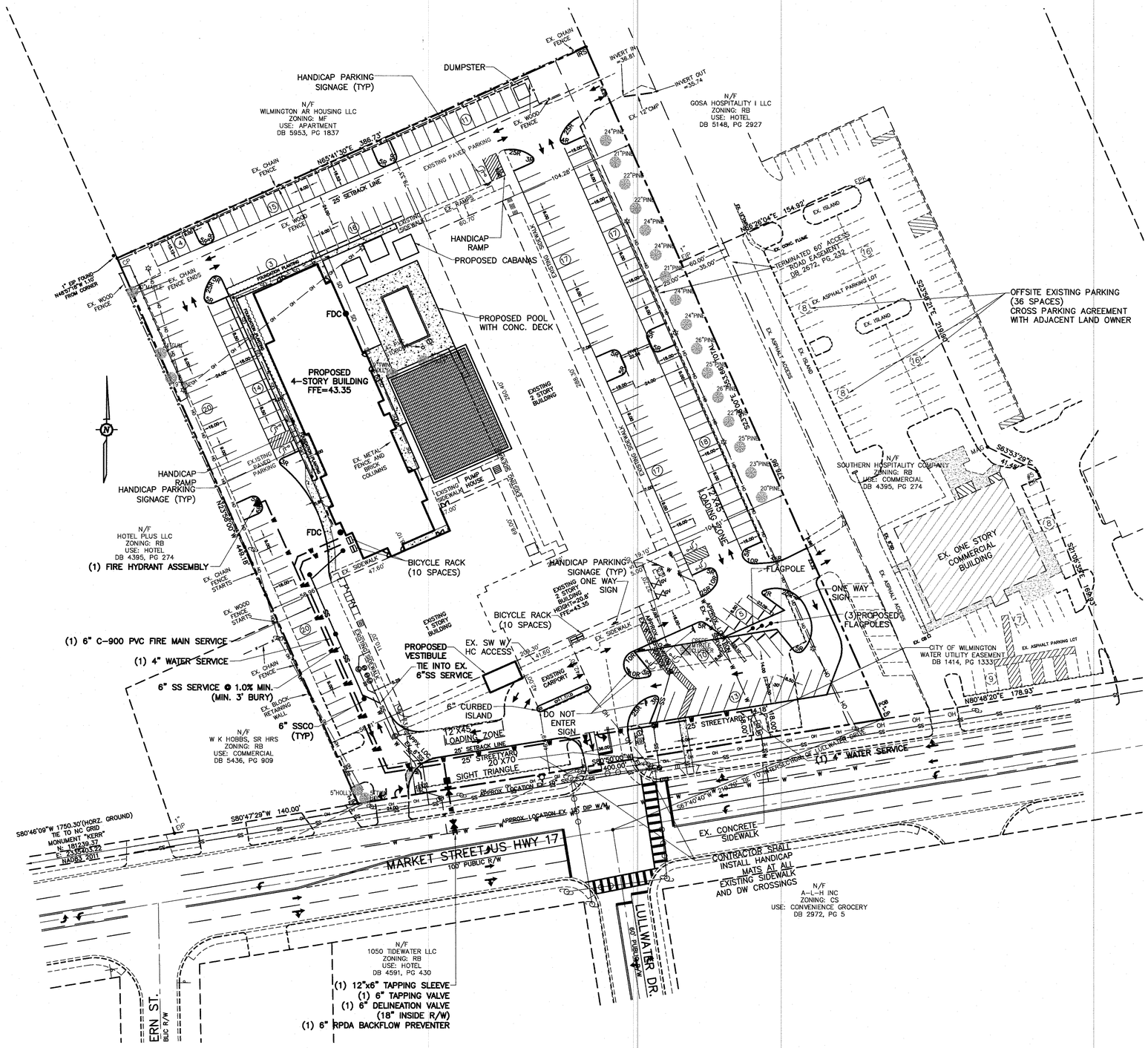

SITE PLAN

BAR SCALE 1"=40'

40' 20' 0' 40' 80' 120'

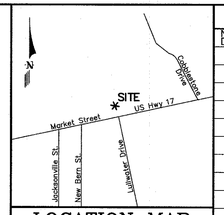

LOCATION MAP
NTS

REVISIONS		
No./Date	Description	By

NOTES:

ZONING
1) TOPOGRAPHY COMPLETED BY PORT CITY GEOMATICS, LTD.
2) PERMITTING OF BUSINESS IDENTIFICATION SIGNAGE IS A SEPARATE PROCESS. CITY OF WILMINGTON WILL NOT ALLOW OBSTRUCTIONS WITHIN THE RIGHT-OF-WAY.
3) CONTRACTOR SHALL FIELD VERIFY SIZE, MATERIAL, INVERTS AND LOCATION OF ALL EXISTING UTILITIES PRIOR TO INSTALLATION OF PROPOSED CONNECTIONS.
4) EXISTING EASEMENTS AS SHOWN
5) CONTRACTOR SHALL MAINTAIN ALL-WEATHER ACCESS FOR EMERGENCY VEHICLES AT ALL TIMES DURING CONSTRUCTION.
6) UNDERGROUND FIRE LINE(S) MUST BE PERMITTED AND INSPECTED BY THE WILMINGTON FIRE DEPARTMENT FROM THE PUBLIC RIGHT-OF-WAY TO THE BUILDING. CONTACT THE WILMINGTON FIRE DEPARTMENT DIVISION OF FIRE AND LIFE SAFETY AT 910-341-0696.

SOLID WASTE
1) SITE TO USE DUMPSTER.

TRAFFIC
1) ALL PAVEMENT MARKINGS IN PUBLIC RIGHTS-OF-WAY AND FOR DRIVEWAYS ARE TO BE THERMOPLASTIC AND MEET CITY AND/OR NCDOT STANDARDS.
2) TRAFFIC CONTROL DEVICES (INCLUDING SIGNS AND PAVEMENT MARKINGS) IN AREAS OPEN TO PUBLIC TRAFFIC ARE TO MEET MUTCD (MANUAL ON UNIFORM TRAFFIC CONTROL DEVICES) STANDARDS.
3) CONTACT TRAFFIC ENGINEERING AT 910-341-7888 TO ENSURE THAT ALL TRAFFIC SIGNALS FACILITIES AND EQUIPMENT ARE SHOWN ON THE PLAN.
4) CALL TRAFFIC ENGINEERING AT 910-341-7888 FORTY-EIGHT HOURS PRIOR TO ANY EXCAVATION IN THE RIGHT-OF-WAY.
5) ANY BROKEN OR MISSING SIDEWALK PANELS, DRIVEWAY PANELS AND CURBING WILL BE REPLACED.
6) CONTACT 910-341-7888 TO DISCUSS STREET LIGHTING OPTIONS.
7) ALL TRAFFIC CONTROL SIGNS AND MARKINGS OFF THE RIGHT-OF-WAY ARE TO BE MAINTAINED BY THE PROPERTY OWNER IN ACCORDANCE WITH MUTCD STANDARDS.
8) NO ROWS TO BE CLOSED.
9) NO STREETS PROPOSED.
10) OFF SITE PARKING PROPOSED AS SHOWN.
11) DRIVEWAYS TO MEET CITY STANDARDS.
13) ALL PARKING STALL MARKINGS AND LANE ARROWS WITHIN THE PARKING AREAS SHALL BE WHITE.
14) STOP SIGNS AND STREET SIGNS TO REMAIN IN PLACE DURING CONSTRUCTION.
15) TACTILE WARNING MATS WILL BE INSTALLED ON ALL WHEELCHAIR RAMPS.
16) POSTED SPEED LIMIT 40 MPH.

LANDSCAPING
1) A LANDSCAPING PLAN INDICATING THE LOCATION OF REQUIRED STREET TREES SHALL BE SUBMITTED TO THE CITY OF WILMINGTON TRAFFIC ENGINEERING DIVISION AND THE PARKS AND RECREATION DEPARTMENT FOR REVIEW AND APPROVAL PRIOR TO THE RECORDING OF THE FINAL PLAT.
2) NO OBSTRUCTIONS ARE PERMITTED IN THE SPACE BETWEEN THIRTY (30) INCHES AND TEN (10) FEET ABOVE THE GROUND WITHIN THE TRIANGULAR SITE DISTANCE.
3) PRIOR TO ANY CLEARING, GRADING OR CONSTRUCTION ACTIVITY, TREE PROTECTION FENCING WILL BE INSTALLED AROUND PROTECTED TREES OR GROVES OF TREES AND NO CONSTRUCTION WORKERS, TOOLS, MATERIALS, OR VEHICLES ARE PERMITTED WITHIN THE TREE PROTECTION FENCING.
4) ANY TREES AND/OR AREAS DESIGNATED TO BE PROTECTED MUST BE PROPERLY BARRICADED WITH FENCING AND PROTECTED THROUGHOUT CONSTRUCTION TO INSURE THAT NO CLEARING, GRADING OR STAGING OF MATERIALS WILL OCCUR IN THOSE AREAS.
5) NO EQUIPMENT IS ALLOWED ON SITE UNTIL ALL TREE PROTECTION FENCING AND SILT FENCING IS INSTALLED AND APPROVED. PROTECTIVE FENCING IS TO BE MAINTAINED THROUGHOUT THE DURATION OF THE PROJECT AND CONTRACTORS SHALL RECEIVE ADEQUATE INSTRUCTIONS ON TREE PROTECTION METHODS.
6) ALL PROPOSED VEGETATION WITHIN SIGHT TRIANGLES SHALL NOT INTERFERE WITH CLEAR VISUAL SIGHT LINES FROM 30"-10'.

CFPUA
1) WATER AND SEWER SERVICE SHALL MEET CAPE FEAR PUBLIC UTILITY AUTHORITY (CFPUA) DETAILS AND SPECIFICATIONS.
2) PROJECT SHALL COMPLY WITH THE CFPUA CROSS CONNECTION CONTROL REQUIREMENTS. WATER METER(S) CANNOT BE RELEASED UNTIL ALL REQUIREMENTS ARE MET AND THE STATE HAS GIVEN THEIR FINAL APPROVAL.
3) IF THE CONTRACTOR DESIRES CFPUA WATER FOR CONSTRUCTION, HE SHALL APPLY IN ADVANCE FOR THIS SERVICE AND MUST PROVIDE A REDUCED PRESSURE ZONE (RPZ) BACKFLOW PREVENTION DEVICE ON THE DEVELOPERS SIDE OF THE WATER METER BOX.
4) ANY IRRIGATION SYSTEM SUPPLIED BY CFPUA WATER SHALL COMPLY WITH THE CFPUA'S CONNECTION CONTROL REGULATION. CALL 910-332-6419 FOR INFORMATION.
5) ANY BACKFLOW PREVENTION DEVICES REQUIRED BY CFPUA WILL NEED TO BE ON THE LIST OF APPROVED DEVICES FOR USCFCCCHR OR ASSE.
6) PUBLIC WATER MAIN EXTENSION AND WATER SERVICES PROPOSED. SANITARY SEWER SERVICE PROPOSED.
7) CONTACT THE NORTH CAROLINA ONE CALL CENTER AT 1-800-632-4949 PRIOR TO DOING ANY DIGGING, CLEARING OR GRADING.
8) ANY IRRIGATION SYSTEM SHALL BE EQUIPPED WITH A RAIN AND FREEZER SENSOR.
9) CONTRACTOR TO FIELD VERIFY EXISTING WATER AND SEWER SERVICE LOCATIONS, SIZES AND MATERIALS PRIOR TO CONSTRUCTION. ENGINEER TO BE NOTIFIED OF ANY CONFLICTS.
10) A UTILITY CUT PERMIT IS REQUIRED FOR EACH OPEN CUT OF A CITY STREET. CONTACT 910-341-5888 FOR MORE DETAILS.

DRAINAGE
1) SHEET FLOW TO PROPOSED INLETS TO PROPOSED WET DETENTION BASIN, TO EITHER PIPE WRAPPED IN 18" OF SAND THEN TO A LEVEL SPREADER/FILTER STRIP BEFORE DISCHARGING AT A NON-EROSIVE VELOCITY TO EXISTING WETLANDS AND STREAM OR BYPASS TO OUTLET PIPE BEFORE DISCHARGING AT A NON-EROSIVE VELOCITY TO EXISTING WETLANDS AND STREAM.

UNDERGROUND UTILITIES
1) ALL ELECTRIC, CABLE TELEVISION AND TELEPHONE FACILITIES, FIRE ALARM CONDUITS, STREET LIGHTING WIRING AND OTHER WIRING CONDUITS AND SIMILAR FACILITIES SHALL BE PLACED UNDERGROUND BY THE DEVELOPER OR THE APPROPRIATE UTILITY COMPANY.
2) A MINIMUM COVER OF 30-INCHES OVER ALL PROPOSED WATER LINES SHALL BE PROVIDED.

FIRE
1) FIRE HYDRANTS TO BE INSTALLED PER CITY OF WILMINGTON ORDINANCE AND CFPUA STANDARDS.
2) PARKING AND LANDSCAPING CANNOT BLOCK FIRE HYDRANTS OR FDC'S.
3) FDC'S CAN BE NO FURTHER THAN 40' FROM FIRE DEPARTMENT VEHICLE PLACEMENT.
4) FDC'S CAN BE NO FURTHER THAN 150' FROM A FIRE HYDRANT.
5) SHOW ALL FDC LOCATIONS ON FINAL PLAN.
6) ALL WEATHER ACCESS ROAD MUST BE MAINTAINED AROUND CONSTRUCTION SITE AT ALL TIMES.
7) NEW HYDRANTS SHALL BE BROUGHT INTO SERVICE PRIOR TO COMBUSTIBLE MATERIALS BEING DELIVERED TO THE JOB SITE.
8) HYDRANTS SHALL BE OF SUFFICIENT NUMBERS TO ACCOMMODATE BASE FIRE FLOW REQUIREMENTS OF STRUCTURE.
9) IN ADDITION TO THE STANDARD COMMENTS, ADDITIONAL FIRE PROTECTION AND ACCESSIBILITY REQUIREMENTS MAY BE REQUIRED DUE TO ANY SPECIAL CIRCUMSTANCES CONCERNING THE PROJECT.
10) PRIVATE UNDERGROUND FIRE LINES REQUIRE A SEPARATE UNDERGROUND FIRE LINE PERMIT FROM THE WILMINGTON FIRE AND LIFE SAFETY DIVISION 910-343-0696.
11) ALL ISOLATION VALVES WITHIN THE "HOT BOX" SHALL BE ELECTRICALLY SUPERVISED. PLEASE WORK CLOSELY WITH YOUR FIRE SPRINKLER AND ALARM INSTALLER IN REGARDS TO RUNNING WIRE FOR TAMPER SWITCH.
12) BUILDING CONSTRUCTION TYPE IS 5A.

SITE
1) SITE LIGHTING TO BE PROVIDED BY DUKE ENERGY.

SITE DATA:

PROPERTY OWNER	SERAJ ENTERPRISES, INC.
PROJECT ADDRESS	5001 MARKET STREET
PIN NUMBERS	R04915-001-010-000
AREA NOT IN A FEMA 100-YEAR FLOOD ZONE	
TRACT AREA	193,914 SF (4.45 AC)
DISTURBED AREA	Ac.
ZONING DISTRICT	RB: REGIONAL BUSINESS
SETBACKS REQUIRED	FRONT: 25' REAR: 15' SIDE: 0'
PROPOSED BUILDING SETBACK (VESTIBULE)	FRONT: 66.7' REAR: – SIDE: 124.8'
PROPOSED BUILDING SETBACK (HOTEL)	FRONT: – REAR: 65.9' SIDE: 66.6'
CAMA LAND USE	URBAN
BUILDING USE	HOTEL
PROPOSED BUILDING AREA	SF
BUILDING LOT COVERAGE (53,340/193,914)	27.51%
NUMBER OF BUILDINGS	2
NUMBER OF UNITS	–
BUILDING HEIGHT (HOTEL/VESTIBULE)	40'/20'
NUMBER OF STORIES (HOTEL/VESTIBULE)	4/1
GROSS SF PER FLOOR (HOTEL)	
GROUND FLOOR	13,469 SF
2ND, 3RD & 4TH FLOORS	13,201 SF
GROSS SF PER FLOOR (VESTIBULE)	370 SF
EXISTING IMPERVIOUS AREAS:	
EXISTING BUILDING	38,995 SF
EXISTING ASPHALT	82,878 SF
EXISTING CONCRETE	13,790 SF
EXISTING IMPERVIOUS AREA	135,663 SF (69.96%)
PROPOSED ONSITE IMPERVIOUS AREAS:	
PROPOSED BUILDING (INCLUDING CANOPY & CABANAS)	15,020 SF
PROPOSED ASPHALT & CURBING	10,535 SF
PROPOSED CONCRETE	5,975 SF
EXISTING IMPERVIOUS TO BE REMOVED	–18,590 SF
EXISTING IMPERVIOUS TO REMAIN	117,073 SF
TOTAL ONSITE IMPERVIOUS AREA	148,603 SF (79.63%)
TOTAL OFFSITE IMPERVIOUS AREA	62 SF
PARKING REQUIRED:	
1/GUEST ROOM PLUS 50% OF THE REQUIRED SPACES FOR ANY ACCESSORY USES	
1/GUEST ROOM (207 ROOMS)	207
RESTAURANT (1/80 SF MIN x 50% & 1/65 SF MAX x50%) (2000 SF/80x50% & 2000 SF/65x50%)	13–15
BANQUET HALL (1/80 SF MIN x 50% & 1/65 SF MAX x50%) (2575 SF/80x50% & 2575 SF/65x50%)	16–20
TOTAL PARKING REQUIRED	236–242
PARKING PROVIDED (ONSITE)	200
PARKING PROVIDED (OFFSITE)	36
TOTAL PARKING PROVIDED (ONSITE+OFFSITE)	236
HANDICAP SPACES REQUIRED	7
HANDICAP SPACES PROVIDED	7
BICYCLE PARKING REQUIRED	15
BICYCLE PARKING PROPOSED	20
PUBLIC WATER AND SEWER BY CFPUA	
EXISTING WATER FLOW:	13,200 GPD
EXISTING SEWER FLOW:	12,000 GPD
PROPOSED WATER FLOW: (120 GPD PER ROOM x 207 ROOMS x 110%)	27,324 GPD
PROPOSED SEWER FLOW: (120 GPD PER ROOM x 207 ROOMS)	24,840 GPD

LEGEND

	PROPERTY BOUNDARY
	LIGHT POLE
	CURB INLET
	UTILITY POLE
–OH–	OVERHEAD WIRE
	GAS ASSEMBLY
T	TRAFFIC BOX
W	WATER METER
	DROP INLET
	GUY WIRE
S	SANITARY SEWER MANHOLE
C	SEPTIC CLEANOUT
B	BACKFLOW PREVENTER
	FIRE HYDRANT
	SIGN
	LARGE SIGN
	ELECTRIC APPARATUS
U	UTILITY BOX
I	IRRIGATION CONTROL VALVE
—SS—	PROPOSED SEWER
—W—	PROPOSED WATER
—SD—	PROPOSED STORM WATER

SITE AND UTILITY PLAN

TRU & TAPESTRY HOTEL

5001 MARKET STREET
WILMINGTON, NORTH CAROLINA

TRIPP ENGINEERING, P.C.
419 Chestnut Street
Wilmington, North Carolina 28401
Phone 910-763-5100
Fax 910-763-5631

© 2014 Tripp Engineering, P.C.

NORTH CAROLINA PROFESSIONAL SEAL 17374 ENGINEER PAUL GREGORY TRIPP

DATE 02-05-19
DESIGN PGT
DRAWN JET

C2

SHEET 2 OF 5

17068

CITY OF WILMINGTON NORTH CAROLINA
Public Services • Engineering Division
APPROVED STORMWATER MANAGEMENT PLAN
Date: _____ Permit #_____
Signed: _____

Approved Construction Plan		
	Name	Date
Planning		
Traffic		
Fire		

For each open utility cut of City streets, a $325 permit shall be required from the City prior to occupancy and/or project acceptance.

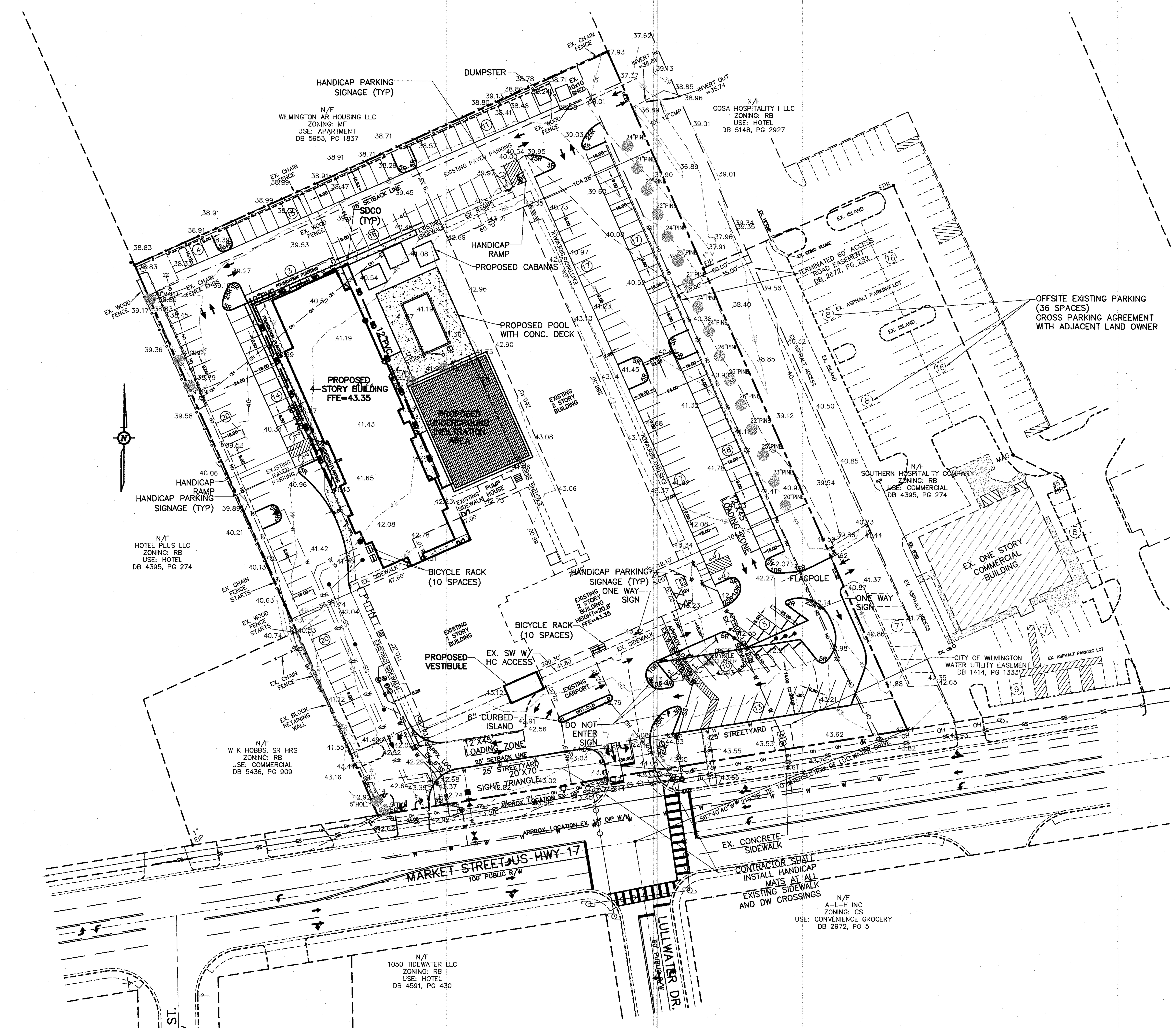

SITE PLAN

BAR SCALE 1"=40'

40' 20' 0' 40' 80' 120'

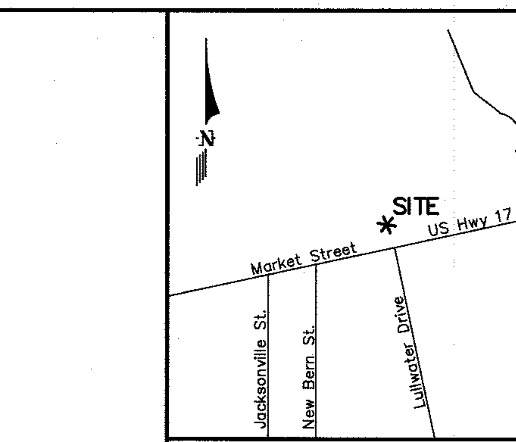

LOCATION MAP

NTS

NOTES:

ZONING

1) TOPOGRAPHY COMPLETED BY PORT CITY GEOMATICS, LTD.
2) PERMITTING OF BUSINESS IDENTIFICATION SIGNAGE IS A SEPARATE PROCESS. CITY OF WILMINGTON WILL NOT ALLOW OBSTRUCTIONS WITHIN THE RIGHT-OF-WAY.
3) CONTRACTOR SHALL FIELD VERIFY SIZE, MATERIAL, INVERTS AND LOCATION OF ALL EXISTING UTILITIES PRIOR TO INSTALLATION OF PROPOSED CONNECTIONS.
4) EXISTING EASEMENTS AS SHOWN
5) CONTRACTOR SHALL MAINTAIN ALL-WEATHER ACCESS FOR EMERGENCY VEHICLES AT ALL TIMES DURING CONSTRUCTION.
6) UNDERGROUND FIRE LINE(S) MUST BE PERMITTED AND INSPECTED BY THE WILMINGTON FIRE DEPARTMENT FROM THE PUBLIC RIGHT-OF-WAY TO THE BUILDING. CONTACT THE WILMINGTON FIRE DEPARTMENT DIVISION OF FIRE AND LIFE SAFETY AT 910-341-0696.

SOLID WASTE

1) SITE TO USE DUMPSTER.

TRAFFIC

1) ALL PAVEMENT MARKINGS IN PUBLIC RIGHTS-OF-WAY AND FOR DRIVEWAYS ARE TO BE THERMOPLASTIC AND MEET CITY AND/OR NCDOT STANDARDS.
2) TRAFFIC CONTROL DEVICES (INCLUDING SIGNS AND PAVEMENT MARKINGS) IN AREAS OPEN TO PUBLIC TRAFFIC ARE TO MEET MUTCD (MANUAL ON UNIFORM TRAFFIC CONTROL DEVICES) STANDARDS.
3) CONTACT TRAFFIC ENGINEERING AT 910-341-7888 TO ENSURE THAT ALL TRAFFIC SIGNALS FACILITIES AND EQUIPMENT ARE SHOWN ON THE PLAN.
4) CALL TRAFFIC ENGINEERING AT 910-341-7888 FORTY-EIGHT HOURS PRIOR TO ANY EXCAVATION IN THE RIGHT-OF-WAY.
5) ANY BROKEN OR MISSING SIDEWALK PANELS, DRIVEWAY PANELS AND CURBING WILL BE REPLACED.
6) CONTACT 910-341-7888 TO DISCUSS STREET LIGHTING OPTIONS.
7) ALL TRAFFIC CONTROL SIGNS AND MARKINGS OFF THE RIGHT-OF-WAY ARE TO BE MAINTAINED BY THE PROPERTY OWNER IN ACCORDANCE WITH MUTCD STANDARDS.
8) NO ROWS TO BE CLOSED.
9) NO STREETS PROPOSED.
10) OFF SITE PARKING PROPOSED AS SHOWN.
11) DRIVEWAYS TO MEET CITY STANDARDS.
13) ALL PARKING STALL MARKINGS AND LANE ARROWS WITHIN THE PARKING AREAS SHALL BE WHITE.
14) STOP SIGNS AND STREET SIGNS TO REMAIN IN PLACE DURING CONSTRUCTION.
15) TACTILE WARNING MATS WILL BE INSTALLED ON ALL WHEELCHAIR RAMPS.
16) POSTED SPEED LIMIT 40 MPH.

LANDSCAPING

1) A LANDSCAPING PLAN INDICATING THE LOCATION OF REQUIRED STREET TREES SHALL BE SUBMITTED TO THE CITY OF WILMINGTON TRAFFIC ENGINEERING DIVISION AND THE PARKS AND RECREATION DEPARTMENT FOR REVIEW AND APPROVAL PRIOR TO THE RECORDING OF THE FINAL PLAT.
2) NO OBSTRUCTIONS ARE PERMITTED IN THE SPACE BETWEEN THIRTY (30) INCHES AND TEN (10) FEET ABOVE THE GROUND WITHIN THE TRIANGULAR SITE DISTANCE.
3) PRIOR TO ANY CLEARING, GRADING OR CONSTRUCTION ACTIVITY, TREE PROTECTION FENCING WILL BE INSTALLED AROUND PROTECTED TREES OR GROVES OF TREES AND NO CONSTRUCTION WORKERS, TOOLS, MATERIALS, OR VEHICLES ARE PERMITTED WITHIN THE TREE PROTECTION FENCING.
4) ANY TREES AND/OR AREAS DESIGNATED TO BE PROTECTED MUST BE PROPERLY BARRICADED WITH FENCING AND PROTECTED THROUGHOUT CONSTRUCTION TO INSURE THAT NO CLEARING, GRADING OR STAGING OF MATERIALS WILL OCCUR IN THOSE AREAS.
5) NO EQUIPMENT IS ALLOWED ON SITE UNTIL ALL TREE PROTECTION FENCING AND SILT FENCING IS INSTALLED AND APPROVED. PROTECTIVE FENCING IS TO BE MAINTAINED THROUGHOUT THE DURATION OF THE PROJECT AND CONTRACTORS SHALL RECEIVE ADEQUATE INSTRUCTIONS ON TREE PROTECTION METHODS.
6) ALL PROPOSED VEGETATION WITHIN SIGHT TRIANGLES SHALL NOT INTERFERE WITH CLEAR VISUAL SIGHT LINES FROM 30"-10'.

CFPUA

1) WATER AND SEWER SERVICE SHALL MEET CAPE FEAR PUBLIC UTILITY AUTHORITY (CFPUA) DETAILS AND SPECIFICATIONS.
2) PROJECT SHALL COMPLY WITH THE CFPUA CROSS CONNECTION CONTROL REQUIREMENTS. WATER METER(S) CANNOT BE RELEASED UNTIL ALL REQUIREMENTS ARE MET AND THE STATE HAS GIVEN THEIR FINAL APPROVAL.
3) IF THE CONTRACTOR DESIRES CFPUA WATER FOR CONSTRUCTION, HE SHALL APPLY IN ADVANCE FOR THIS SERVICE AND MUST PROVIDE A REDUCED PRESSURE ZONE (RPZ) BACKFLOW PREVENTION DEVICE ON THE DEVELOPERS SIDE OF THE WATER METER BOX.
4) ANY IRRIGATION SYSTEM SUPPLIED BY CFPUA WATER SHALL COMPLY WITH THE CFPUA'S CONNECTION CONTROL REGULATION. CALL 910-332-6419 FOR INFORMATION.
5) ANY BACKFLOW PREVENTION DEVICES REQUIRED BY CFPUA WILL NEED TO BE ON THE LIST OF APPROVED DEVICES FOR USCFCCCHR OR ASSE.
6) PUBLIC WATER MAIN EXTENSION AND WATER SERVICES PROPOSED. SANITARY SEWER SERVICE PROPOSED.
7) CONTACT THE NORTH CAROLINA ONE CALL CENTER AT 1-800-632-4949 PRIOR TO DOING ANY DIGGING, CLEARING OR GRADING.
8) ANY IRRIGATION SYSTEM SHALL BE EQUIPPED WITH A RAIN AND FREEZER SENSOR.
9) CONTRACTOR TO FIELD VERIFY EXISTING WATER AND SEWER SERVICE LOCATIONS, SIZES AND MATERIALS PRIOR TO CONSTRUCTION. ENGINEER TO BE NOTIFIED OF ANY CONFLICTS.
10) A UTILITY CUT PERMIT IS REQUIRED FOR EACH OPEN CUT OF A CITY STREET. CONTACT 910-341-5888 FOR MORE DETAILS.

DRAINAGE

1) SHEET FLOW TO PROPOSED INLETS TO PROPOSED WET DETENTION BASIN, TO EITHER PIPE WRAPPED IN 18" OF SAND THEN TO A LEVEL SPREADER/FILTER STRIP BEFORE DISCHARGING AT A NON-EROSIVE VELOCITY TO EXISTING WETLANDS AND STREAM OR BYPASS TO OUTLET PIPE BEFORE DISCHARGING AT A NON-EROSIVE VELOCITY TO EXISTING WETLANDS AND STREAM.

UNDERGROUND UTILITIES

1) ALL ELECTRIC, CABLE TELEVISION AND TELEPHONE FACILITIES, FIRE ALARM CONDUITS, STREET LIGHTING WIRING AND OTHER WIRING CONDUITS AND SIMILAR FACILITIES SHALL BE PLACED UNDERGROUND BY THE DEVELOPER OR THE APPROPRIATE UTILITY COMPANY.
2) A MINIMUM COVER OF 30-INCHES OVER ALL PROPOSED WATER LINES SHALL BE PROVIDED.

FIRE

1) FIRE HYDRANTS TO BE INSTALLED PER CITY OF WILMINGTON ORDINANCE AND CFPUA STANDARDS.
2) PARKING AND LANDSCAPING CANNOT BLOCK FIRE HYDRANTS OR FDC'S.
3) FDC'S CAN BE NO FURTHER THAN 40' FROM FIRE DEPARTMENT VEHICLE PLACEMENT.
4) FDC'S CAN BE NO FURTHER THAN 150' FROM A FIRE HYDRANT.
5) SHOW ALL FDC LOCATIONS ON FINAL PLAN.
6) ALL WEATHER ACCESS ROAD MUST BE MAINTAINED AROUND CONSTRUCTION SITE AT ALL TIMES.
7) NEW HYDRANTS SHALL BE BROUGHT INTO SERVICE PRIOR TO COMBUSTIBLE MATERIALS BEING DELIVERED TO THE JOB SITE.
8) HYDRANTS SHALL BE OF SUFFICIENT NUMBERS TO ACCOMMODATE BASE FIRE FLOW REQUIREMENTS OF STRUCTURE.
9) IN ADDITION TO THE STANDARD COMMENTS, ADDITIONAL FIRE PROTECTION AND ACCESSIBILITY REQUIREMENTS MAY BE REQUIRED DUE TO ANY SPECIAL CIRCUMSTANCES CONCERNING THE PROJECT.
10) PRIVATE UNDERGROUND FIRE LINES REQUIRE A SEPARATE UNDERGROUND FIRE LINE PERMIT FROM THE WILMINGTON FIRE AND LIFE SAFETY DIVISION 910-343-0696.
11) ALL ISOLATION VALVES WITHIN THE "HOT BOX" SHALL BE ELECTRICALLY SUPERVISED. PLEASE WORK CLOSELY WITH YOUR FIRE SPRINKLER AND ALARM INSTALLER IN REGARDS TO RUNNING WIRE FOR TAMPER SWITCH.
12) BUILDING CONSTRUCTION TYPE IS 5A.

SITE

1) SITE LIGHTING TO BE PROVIDED BY DUKE ENERGY.

SITE DATA:

PROPERTY OWNER	SERAJ ENTERPRISES, INC.
PROJECT ADDRESS	5001 MARKET STREET
PIN NUMBERS	R04915-001-010-000
AREA NOT IN A FEMA 100-YEAR FLOOD ZONE	
TRACT AREA	193,914 SF (4.45 AC)
DISTURBED AREA	Ac.
ZONING DISTRICT	RB: REGIONAL BUSINESS
SETBACKS REQUIRED	FRONT: 25' REAR: 15' SIDE: 0'
PROPOSED BUILDING SETBACK (VESTIBULE)	FRONT: 66.7' REAR: – SIDE: 124.8'
PROPOSED BUILDING SETBACK (HOTEL)	FRONT: – REAR: 65.9' SIDE: 66.6'
CAMA LAND USE	URBAN
BUILDING USE	HOTEL
PROPOSED BUILDING AREA	SF
BUILDING LOT COVERAGE (53,340/193,914)	27.51%
NUMBER OF BUILDINGS	2
NUMBER OF UNITS	–
BUILDING HEIGHT (HOTEL/VESTIBULE)	40'/20'
NUMBER OF STORIES (HOTEL/VESTIBULE)	4/1
GROSS SF PER FLOOR (HOTEL)	
GROUND FLOOR	13,469 SF
2ND, 3RD & 4TH FLOORS	13,201 SF
GROSS SF PER FLOOR (VESTIBULE)	370 SF
EXISTING IMPERVIOUS AREAS:	
EXISTING BUILDING	38,995 SF
EXISTING ASPHALT	82,878 SF
EXISTING CONCRETE	13,790 SF
EXISTING IMPERVIOUS AREA	135,663 SF (69.96%)
PROPOSED ONSITE IMPERVIOUS AREAS:	
PROPOSED BUILDING (INCLUDING CANOPY & CABANAS)	15,020 SF
PROPOSED ASPHALT & CURBING	10,535 SF
PROPOSED CONCRETE	5,975 SF
EXISTING IMPERVIOUS TO BE REMOVED	-18,590 SF
EXISTING IMPERVIOUS TO REMAIN	117,073 SF
TOTAL ONSITE IMPERVIOUS AREA	148,603 SF (79.63%)
TOTAL OFFSITE IMPERVIOUS AREA	62 SF
PARKING REQUIRED: 1/GUEST ROOM PLUS 50% OF THE REQUIRED SPACES FOR ANY ACCESSORY USES	
1/GUEST ROOM (207 ROOMS)	207
RESTAURANT (1/80 SF MIN x 50% & 1/65 SF MAX x50%) (2000 SF/80x50% & 2000 SF/65x50%)	13–15
BANQUET HALL (1/80 SF MIN x 50% & 1/65 SF MAX x50%) (2575 SF/80x50% & 2575 SF/65x50%)	16–20
TOTAL PARKING REQUIRED	236–242
PARKING PROVIDED (ONSITE)	200
PARKING PROVIDED (OFFSITE)	36
TOTAL PARKING PROVIDED (ONSITE+OFFSITE)	236
HANDICAP SPACES REQUIRED	7
HANDICAP SPACES PROVIDED	7
BICYCLE PARKING REQUIRED	15
BICYCLE PARKING PROPOSED	20
PUBLIC WATER AND SEWER BY CFPUA	
EXISTING WATER FLOW:	13,200 GPD
EXISTING SEWER FLOW:	12,000 GPD
PROPOSED WATER FLOW: (120 GPD PER ROOM x 207 ROOMS x 110%)	27,324 GPD
PROPOSED SEWER FLOW: (120 GPD PER ROOM x 207 ROOMS)	24,840 GPD

LEGEND

- PROPERTY BOUNDARY
- LIGHT POLE
- CURB INLET
- UTILITY POLE
- OH — OVERHEAD WIRE
- GV — GAS ASSEMBLY
- T — TRAFFIC BOX
- W — WATER METER
- DROP INLET
- GUY WIRE
- S — SANITARY SEWER MANHOLE
- C — SEPTIC CLEANOUT
- B — BACKFLOW PREVENTER
- FIRE HYDRANT
- SIGN
- LARGE SIGN
- ELECTRIC APPARATUS
- U — UTILITY BOX
- I — IRRIGATION CONTROL VALVE
- SS — PROPOSED SEWER
- W — PROPOSED WATER
- SD — PROPOSED STORM WATER
- PROPOSED CONCRETE
- PROPOSED ASPHALT

REVISIONS		
No./Date	Description	By

GRADING, DRAINAGE, EROSION CONTROL, AND STORMWATER MANAGEMENT PLAN

TRU & TAPESTRY HOTEL

5001 MARKET STREET
WILMINGTON, NORTH CAROLINA

TRIPP ENGINEERING, P.C.
419 Chestnut Street
Wilmington, North Carolina 28401
Phone 910-763-5100
Fax 910-763-5631

© 2014 TRIPP ENGINEERING, P.C. LICENSE No. C-1427

NORTH CAROLINA PROFESSIONAL ENGINEER SEAL 17374 PHILIP GREGORY TRIPP

7.5.19

DATE	02-05-19
DESIGN	PGT
DRAWN	JET

C3

SHEET 3 OF 5

17068

CITY OF WILMINGTON NORTH CAROLINA
Public Services • Engineering Division
APPROVED STORMWATER MANAGEMENT PLAN
Date: ______________ Permit #________
Signed: ______________________________

Approved Construction Plan

	Name	Date
Planning		
Traffic		
Fire		

For each open utility cut of City streets, a $325 permit shall be required from the City prior to occupancy and/or project acceptance.

NOTE:
THE CRITICAL ROOT ZONE (CRZ) OF A TREE IS WHERE THE MAJORITY OF A TREE'S ROOTS LAY. 85% OF MOST TREE ROOTS ARE FOUND IN THE TOP 24" OF THE SOIL AND SUPPLY THE MAJORITY OF NUTRIENTS AND WATER. GENERALLY, ROOTS SPREAD OUT 2-3X THE HEIGHT OF THE TREE.

NOTE:
CROWN OF THE TREE IS NEEDED FOR LEAF GROWTH TO PRODUCE OXYGEN, FILTER THE AIR, REDUCE WIND AND SOFTEN NOISE. DO NOT DISFIGURE CROWN WITH INTENSIVE PRUNING.

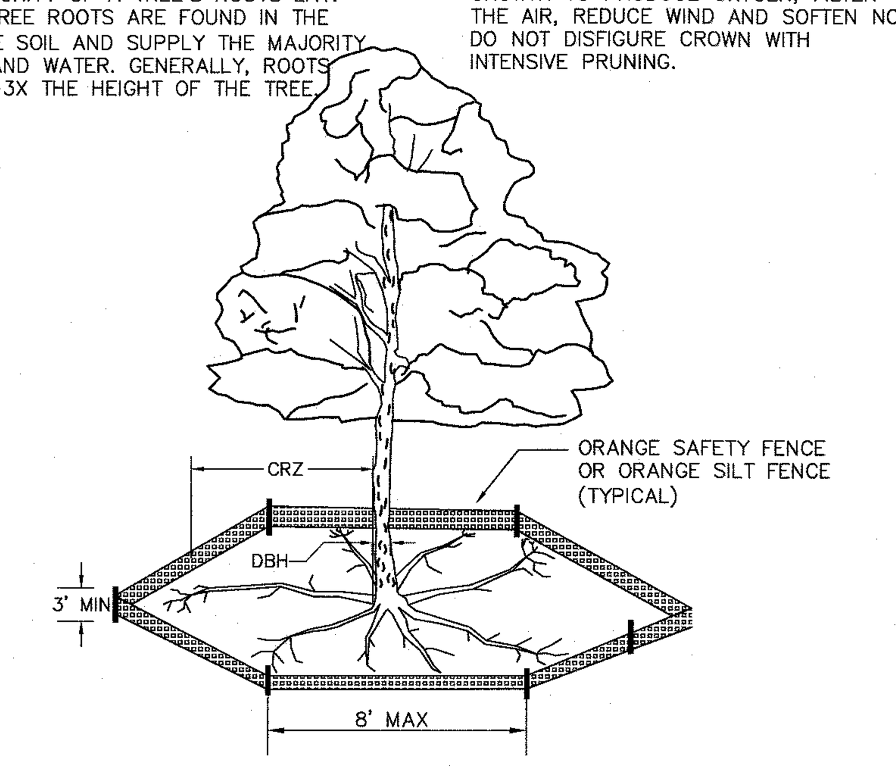

NOTES:
1. PROTECT CRITICAL ROOT ZONE (CRZ) OF TREES PRIOR TO CONSTRUCTION. CLEARLY MARK THE TREES AND ERECT A PROTECTIVE BARRIER AT THE CRZ. BARRIER SHALL BE MAINTAINED UNTIL CONSTRUCTION IS COMPLETE.
2. CRZ RADIUS IS 1 FT PER INCH OF TREE DIAMETER AT BREAST HEIGHT (DBH).
3. IF CONSTRUCTION OCCURS WITHIN THE CRZ, AT LEAST 12" OF MULCH AND/OR LOGGING MATTS SHALL BE PLACED WHERE MACHINERY MANEUVERS TO REDUCE SOIL COMPACTION IN THIS ZONE.
4. WHERE SIDEWALKS AND PATHWAYS PASS WITHIN CRZ, EXTRA CARE SHALL BE TAKEN TO AVOID DAMAGE TO THE ROOTS. ALTERNATE CONSTRUCTION METHODS, SUCH AS A REINFORCED SIDEWALK, SHALL BE IMPLEMENTED AS NECESSARY.
5. FOR ALL TREES, CUTTING OF LARGE STRUCTURAL ROOTS LOCATED NEAR THE BASE OF THE TRUNK IS PROHIBITED. DO NOT COMPACT SOIL BENEATH TREES. NO VEHICLE SHALL BE ALLOWED TO PARK UNDER TREES. NO MATERIALS OR EQUIPMENT SHALL BE STORED BENEATH TREES. DAMAGING THE BARK WITH LAWNMOWERS, CONSTRUCTION EQUIPMENT, OR ANYTHING ELSE IS PROHIBITED. CONTRACTOR SHALL REPAIR DAMAGE TO TREES.
6. FAILING TO INSTALL OR MAINTAIN PROTECTION MEASURES SHALL RESULT IN A STOP WORK ORDER AND FINE OF $500/DAY. DISTURBANCE OTHER THAN THAT ALLOWED ON THE APPROVED PLAN WILL REQUIRE OWNER TO POST A LETTER OF CREDIT FOR 3 YRS FOR TREE MITIGATION.

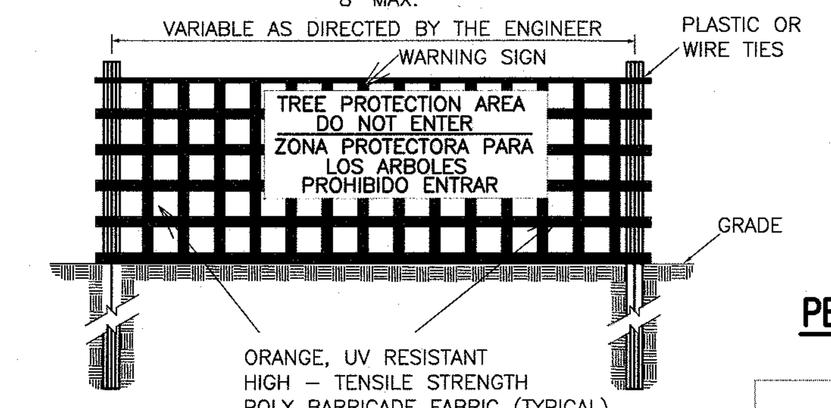

FRONT VIEW

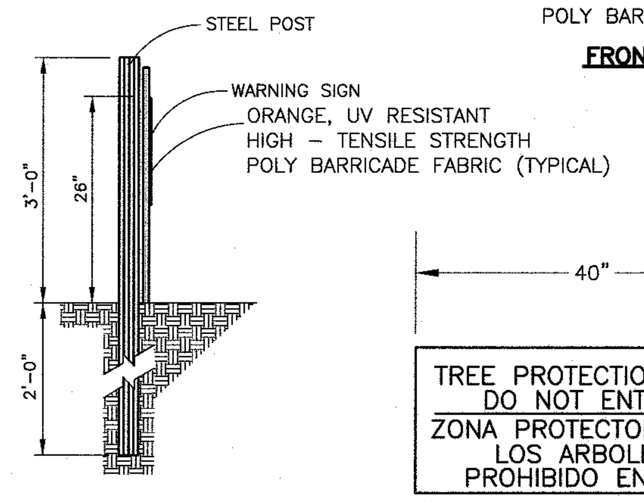

SIDE VIEW

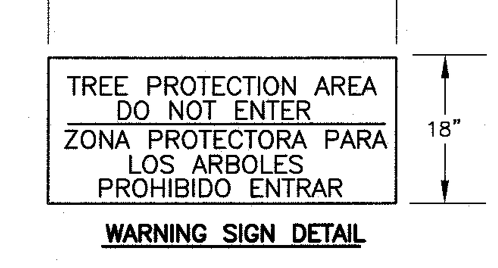

WARNING SIGN DETAIL

NOTES:

1. THE TREE PROTECTION FENCING SHALL NOT BE VIOLATED FOR THE ENTIRE DURATION OF THE PROJECT WITHOUT APPROVAL FROM URBAN FORESTRY STAFF.
2. WARNING SIGNS TO BE MADE OF DURABLE, WEATHERPROOF MATERIAL. LETTERS TO BE 3" HIGH, MINIMUM, CLEARLY LEGIBLE AND SPACED AS DETAILED.
3. SIGNS SHALL BE PLACED AT 50' MAXIMUM INTERVALS. PLACE A SIGN AT EACH END OF LINEAR TREE PROTECTION AND 50' ON CENTER THEREAFTER. FOR TREE PROTECTION AREAS LESS THAN 100' IN PERIMETER, PROVIDE NO LESS THAN TWO SIGNS PER PROTECTION AREA.
4. ATTACH SIGNS SECURELY TO FENCE POSTS AND FABRIC. MAINTAIN TREE PROTECTION FENCE AND SIGNS THROUGHOUT DURATION OF PROJECT.
5. TREE PROTECTION FENCING AND SIGNAGE SHALL BE REMOVED AFTER CONSTRUCTION.
6. ADDITIONAL SIGNS MAY BE REQUIRED BY CITY OF WILMINGTON, BASED ON ACTUAL FIELD CONDITIONS.

TREE PROTECTION DURING CONSTRUCTION SD 15-09
NOT TO SCALE

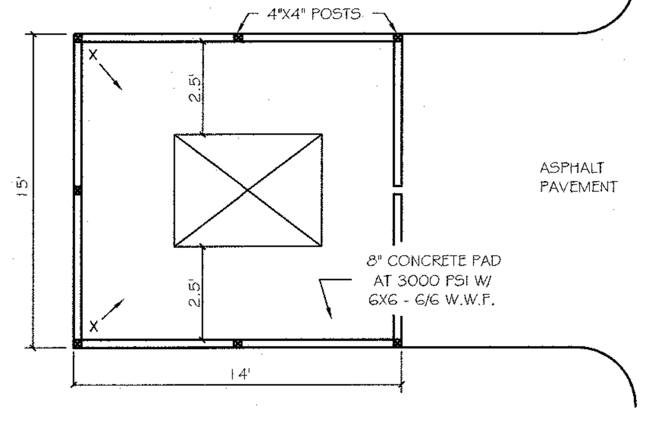

PLAN

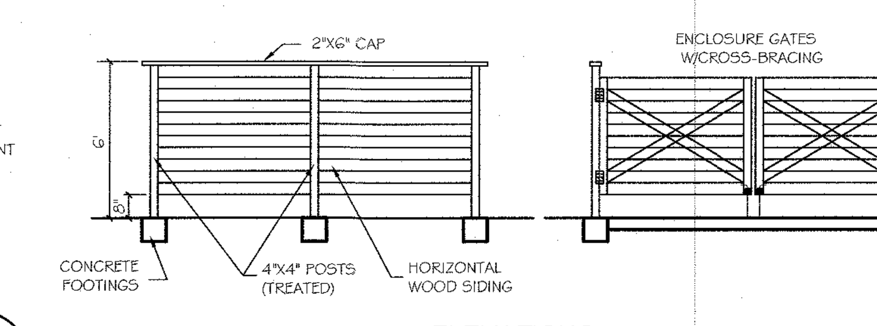

ELEVATIONS

DUMPSTER PAD & ENCLOSURE DETAIL
NTS

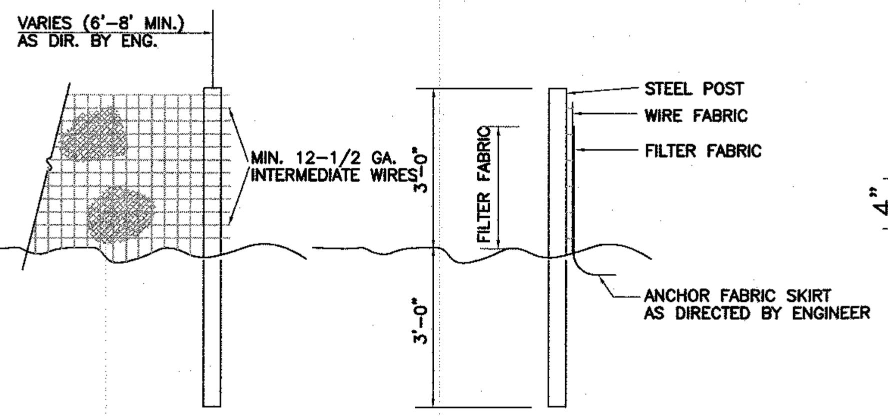

NOTES:
1. FENCE FABRIC SHALL BE A MIN. OF 32" IN WIDTH AND SHALL HAVE A MIN. OF SIX LINE WIRES WITH 12" STAY SPACING.
2. FABRIC SHALL BE FOR EROSION CONTROL AND MIN. OF 36" IN WIDTH. FABRIC SHALL BE FASTENED ADEQUATELY TO THE WIRE FABRIC AS DIRECTED BY THE ENGINEER.
3. STEEL POST SHALL BE 5'-0" IN HEIGHT AND BE OF THE SELF-FASTENER STEEL ANGLE TYPE.

TEMPORARY SILT FENCE
NTS

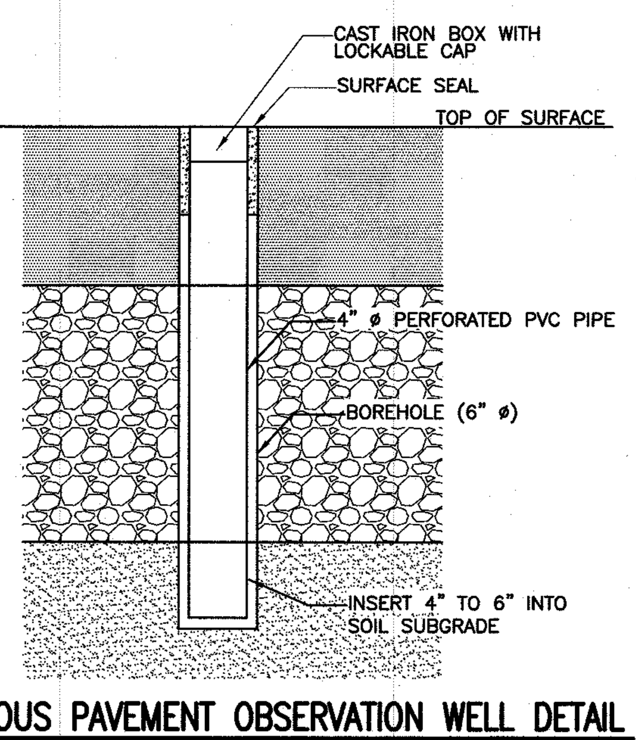

PERVIOUS PAVEMENT OBSERVATION WELL DETAIL
NTS

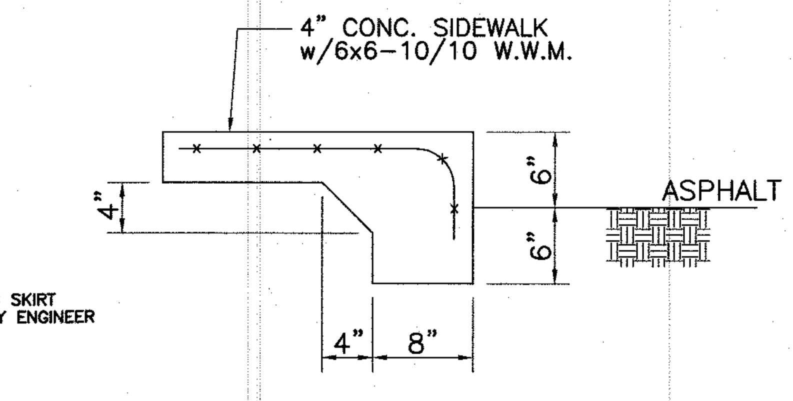

TURN DOWN SIDEWALK
NTS

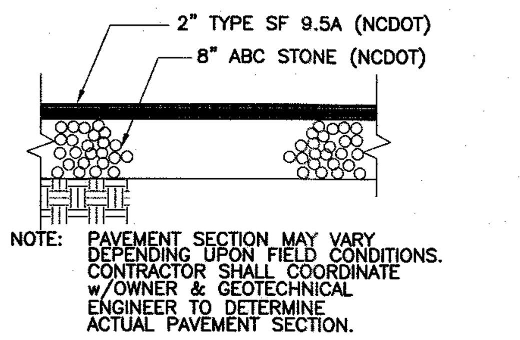

NOTE: PAVEMENT SECTION MAY VARY DEPENDING UPON FIELD CONDITIONS. CONTRACTOR SHALL COORDINATE w/OWNER & GEOTECHNICAL ENGINEER TO DETERMINE ACTUAL PAVEMENT SECTION.

CITY OF WILMINGTON PAVEMENT SECTION
NTS

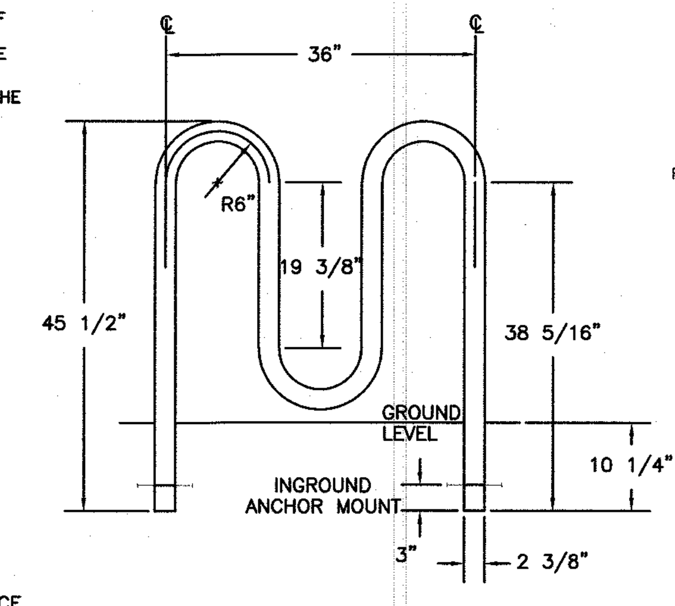

5 CAPACITY BIKE RACK
NTS

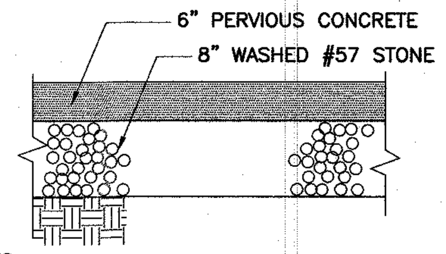

NOTES:
1. CONTRACTOR TO SCARIFY UPPER 6" SUBGRADE JUST PRIOR TO INSTALLATION OF STONE.
2. SHWT ELEVATION 38.75.

PERVIOUS CONCRETE PAVEMENT SECTION
NTS

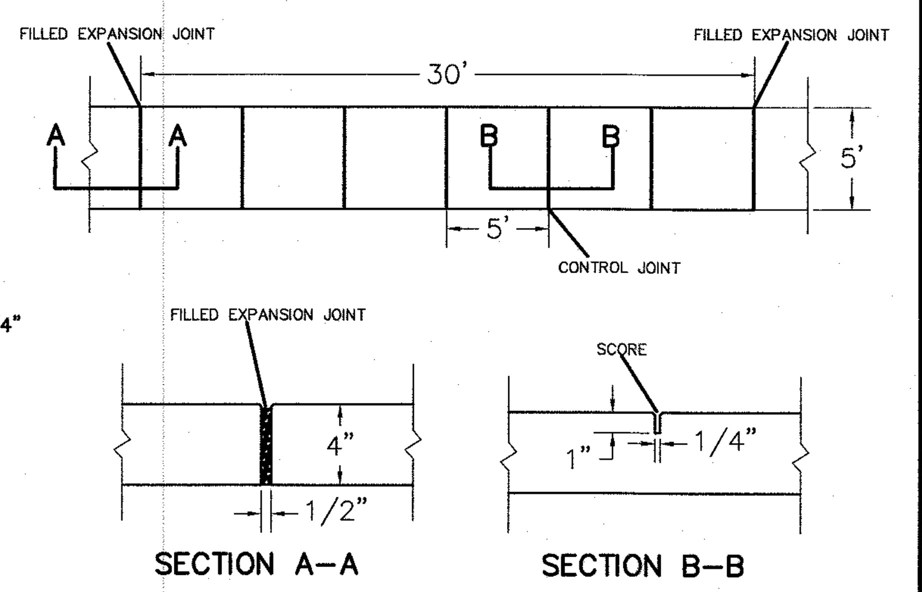

NOTES:
1. JOINT MATERIAL TO COMPLY WITH CURRENT NCDOT STANDARDS.
2. SANITARY SEWER CLEAN-OUTS, WATER METERS, MANHOLES, AND VALVE LIDS TO BE LOCATED OUTSIDE SIDEWALK WHERE FEASIBLE.
3. MINIMUM SIDEWALK WIDTH TO BE 6' MINIMUM IF PLACED AT BACK OF CURB.
4. CONCRETE FOR ALL SIDEWALKS (EXCEPT ANY PORTION CONTAIN WITHIN A DRIVEWAY APRON) SHALL BE CLASS "A" – 3,000 PSI.
5. MINIMUM REPLACEMENT FOR REPAIRS IS A 5' X 5' PANEL
6. 4" STONE BASE MAY BE REQUIRED FOR POOR SOIL CONDITIONS
7. MINIMUM DEPTH FOR TUNNELING BELOW SIDEWALK IS 12"
8. MAX ADJACENT GROUND SLOPE WITHOUT RAILING IS 2:1
9. MIN GRADE FOR PROPER DRAINAGE IS 1% IN AT LEAST 1 DIRECTION. MAX CROSS SLOPE IS 2%. MAX LONGITUDINAL SLOPE IS 8.3%, 10% IF LIMITED BY EXISTING CONDITIONS, OR NO GREATER THAN THE SLOPE OF THE EXISTING ADJACENT ROAD.

CITY OF WILMINGTON SIDEWALK SD 3-10
NTS

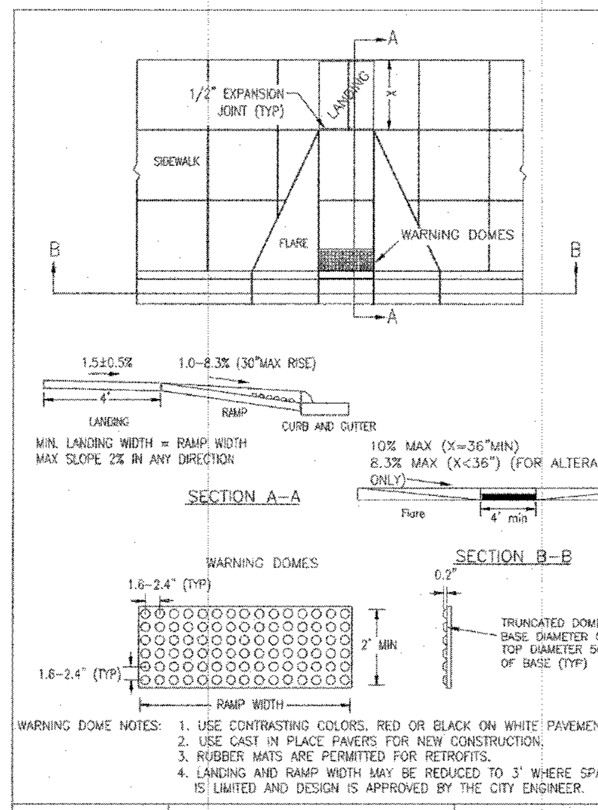

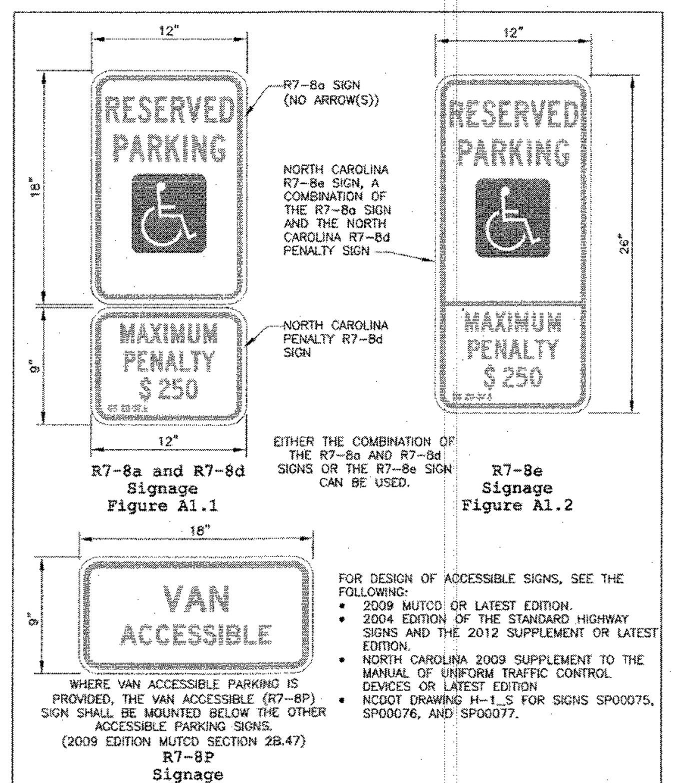

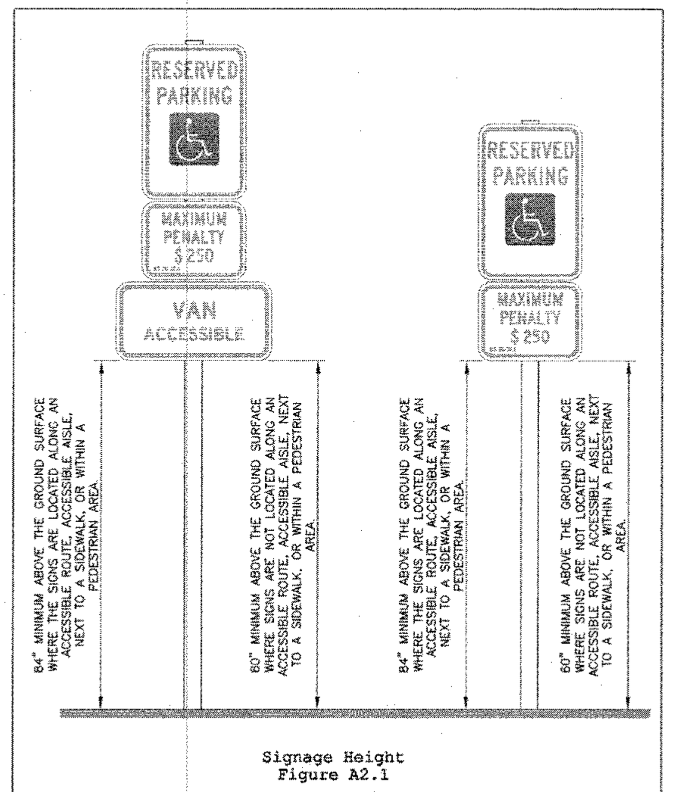

WILMINGTON NORTH CAROLINA
Public Services • Engineering Division
APPROVED STORMWATER MANAGEMENT PLAN
Date: ______________ Permit #________
Signed: ______________________

Approved Construction Plan	
Name	**Date**
Planning	
Traffic	
Fire	

For each open utility cut of City streets, a $325 permit shall be required from the City prior to occupancy and/or project acceptance.

SITE AREA DESCRIPTION	STABILIZATION TIMEFRAME	STABILIZATION TIMEFRAME EXCEPTIONS
PERIMETER DIKES, SWALES, DITCHES AND SLOPES	7 DAYS	NONE
HIGH QUALITY WATER (HQW) ZONES	7 DAYS	NONE
SLOPES STEEPER THAN 3:1	7 DAYS	IF SLOPES ARE 10' OR LESS IN LENGTH AND ARE NOT STEEPER THAN 2:1, 14 DAYS ARE ALLOWED.
SLOPES 3:1 OR FLATTER	14 DAYS	7 DAYS FOR SLOPES GREATER THAN 50 FEET IN LENGTH
ALL OTHER AREAS WITH SLOPES FLATTER THAN 4:1	14 DAYS	NONE (EXCEPT FOR PERIMETERS AND HQW ZONES)

NPDES GROUND STABILIZATION CRITERIA
NTS

SPRING-SUMMER PERMANENT GRASSING DETAIL
SEEDING MIXTURE

SPECIES	RATE (lb/acre)
PENSACOLA BAHIAGRASS	50
SERICEA LESPEDEZA	30
COMMON BERMUDA GRASS	10
GERMAN MILLET	10
TALL FESCUE	50

SEEDING NOTES
1. WHERE A NEAT APPEARANCE IS DESIRED, OMIT SERICEA.
2. USE COMMON BERMUDA GRASS ONLY ON ISOLATED SITES WHERE IT CANNOT BECOME A PEST. BERMUDA GRASS MAY BE REPLACED WITH 5 lb/acre CENTIPEDE GRASS.

SEEDING DATES
APRIL 1 – JULY 15

SOIL AMENDMENTS
APPLY LIME AND FERTILIZER ACCORDING TO SOIL TESTS, OR APPLY 3,000 lb/acre GROUND AGRICULTURE LIMESTONE AND 500 lb/acre 10-10-10 FERTILIZER.

MULCH
APPLY 4,000 lb/acre GRAIN STRAWOR EQUIVALENT COVER OF ANOTHER SUITABLE MULCH. ANCHOR BY TACKING WITH ASPHALT, ROVING, OR NETTING OR BY CRIMPING WITH A MULCH ANCHORING TOOL. A DISK WITH BLADES SET NEARLY STRAIGHT CAN BE USED AS A MULCH ANCHORING TOOL.

MAINTENANCE
REFERTILIZE THE FOLLOWING APRIL WITH 50 lb/acre NITROGEN. REPEAT AS GROWTH REQUIRES. MAY BE MOWED ONLY ONCE A YEAR. WHERE A NEAT APPEARANCE IS DESIRED, OMIT SERICEA AND MOW AS OFTEN AS NEEDED.

FALL-WINTER PERMANENT GRASSING DETAIL
SEEDING MIXTURE

SPECIES	RATE (lb/acre)
TALL FESCUE (BLEND OF TWO OR THREE IMPROVED VARIETIES)	200
RYE (GRAIN)	25

SEEDING DATES
JANUARY – APRIL
AUGUST – DECEMBER

SOIL AMENDMENTS
APPLY LIME AND FERTILIZER ACCORDING TO SOIL TESTS, OR APPLY 3,000-5,000 lb/acre GROUND AGRICULTURAL LIMESTONE (USE THE LOWER RATE ON SANDY SOILS) AND 1,000 lb/acre 10-10-10 FERTILIZER.

MULCH
APPLY 4,000 lb/acre GRAIN STRAW OR EQUIVALENT COVER OF ANOTHER SUITABLE MULCH. ANCHOR STRAW BY TACKING WITH ASPHALT, ROVING, OR NETTING OR BY CRIMPING WITH A MULCH ANCHORING TOOL. A DISK WITH BLADES SET NEARLY STRAIGHT CAN BE USED AS A MULCH ANCHORING TOOL.

MAINTENANCE
FERTILIZE ACCORDING TO SOIL TESTS OR APPLY 40 lb/acre NITROGEN IN JANUARY OR FEBRUARY, 40 lb IN SEPTEMBER AND 40 lb IN NOVEMBER, FROM A 12-4-8, 16-4-8, OR SIMILAR TURF FERTILIZER. AVOID FERTILIZER APPLICATIONS DURING WARM WEATHER, AS THIS INCREASES STAND LOSSES TO DISEASE. RESEED, FERTILIZE, AND MULCH DAMAGED AREAS IMMEDIATELY. MOW TO A HEIGHT OF 2.5-3.5 INCHES AS NEEDED.

LATE WINTER & EARLY SPRING TEMPORARY GRASSING DETAIL
SEEDING MIXTURE

SPECIES	RATE (lb/acre)
Rye (grain)	120
Annual lespedeza (Kobe in Piedmont and Coastal Plain, Korean in Mountains)	50

Omit annual lespedeza when duration of temporary cover is not to extend beyond June.

SEEDING DATES:
Mountains – Above 2500 ft: Feb. 15–May 15
Below 2500 ft: Feb. 1–May 1
Piedmont – Jan. 1–May 1
Coastal Plain – Dec. 1–Apr. 15

SOIL AMENDMENTS
Follow recommendations of soil tests or apply 2,000 lb/acre ground agricultural limestone and 750 lb/acre 10-10-10 fertilizer.

MULCH
APPLY 4,000 LB/ACRE STRAW. ANCHOR STRAW BY TACKING WITH ASPHALT, NETTING, OR A MULCH ANCHORING TOOL. A DISK WITH BLADES SET NEARLY STRAIGHT CAN BE USED AS A MULCH ANCHORING TOOL.

MAINTENANCE
Refertilize if growth is not fully adequate. Reseed, refertilize and mulch immediately following erosion or other damage.

TEMPORARY SUMMER GRASSING DETAIL
SEEDING MIXTURE

SPECIES	RATE (lb/acre)
GERMAN MILLET	40

IN THE PIEDMONT AND MOUNTAINS, A SMALL-STEMMED SUNDANGRASS MAY BE SUBSTITUTED AT A RATE OF 50 LB/ACRE.

SEEDING NOTES
MOUNTAINS – MAY 15–AUG. 15
PIEDMONT – MAY 1–AUG. 15
COASTAL PLAN – APR. 15–AUG. 15

SOIL AMENDMENTS
FOLLOW RECOMMENDATIONS OF SOIL TESTS OR APPLY 2,000 LB/ACRE GROUND AGRICULTURAL LIMESTONE AND 750 LB/ACRE 10-10-10 FERTILIZER.

MULCH
APPLY 4,000 LB/ACRE STRAW. ANCHOR STRAW BY TACKING WITH ASPHALT, NETTING, OR A MULCH ANCHORING TOOL. A DISK WITH BLADES SET NEARLY STRAIGHT CAN BE USED AS A MULCH ANCHORING TOOL.

MAINTENANCE
REFERTILIZE IF GROWTH IS NOT FULLY ADEQUATE. RESEED, REFERTILIZE AND MULCH IMMEDIATELY FOLLOWING EROSION OR OTHER DAMAGE.

TEMPORARY FALL GRASSING DETAIL
SEEDING MIXTURE

SPECIES	RATE (lb/acre)
Rye (grain)	120

SEEDING NOTES
MOUNTAINS – AUG. 15–DEC. 15
COASTAL PLAN and PIEDMONT – AUG. 15–DEC 30

SOIL AMENDMENTS
FOLLOW SOIL TESTS OR APPLY 2,000 LB/ACRE GROUND AGRICULTURAL LIMESTONE AND 1,000 LB/ACRE 10-10-10 FERTILIZER.

MULCH
APPLY 4,000 LB/ACRE STRAW. ANCHOR STRAW BY TACKING WITH ASPHALT, NETTING, OR A MULCH ANCHORING TOOL. A DISK WITH BLADES SET NEARLY STRAIGHT CAN BE USED AS A MULCH ANCHORING TOOL.

MAINTENANCE
Repair and refertilize damaged areas immediately. Topdress with 50 lb/acre of nitrogen in March. If it is necessary to extend temporary cover beyond June 15, overseed with 50 lb/acre Kobe (Piedmont and Coastal Plain) or Korean (Mountains) lespedeza in late February or early March.

SITE WORK NOTES
1. THE CONTRACTOR SHALL VISIT THE SITE AND BECOME FAMILIARIZED WITH EXISTING CONDITIONS BOTH ON AND IMMEDIATELY ADJACENT TO THE SITE.
2. CLEARING: CONTRACTOR SHALL REMOVE ALL TREES AND VEGETATION WITHIN LIMITS OF CONSTRUCTION UNLESS OTHERWISE DESIGNATED TO REMAIN.
3. GRUBBING AND STRIPPING: CONTRACTOR SHALL RAKE AND REMOVE ROOTS, STUMPS, VEGETATION, DEBRIS, EXISTING STRUCTURES ABOVE AND BELOW GRADE, ORGANIC MATERIAL OR ANY OTHER UNSUITABLE MATERIAL WITHIN LIMITS OF CONSTRUCTION.
4. MUCKING: CONTRACTOR SHALL COORDINATE WITH OWNER AND THEIR GEOTECHNICAL REPRESENTATIVE TO COORDINATE REMOVAL OF ANY SOFT AREAS.
5. DISPOSAL: CLEARED, GRUBBED, STRIPPED OR OTHER WASTE MATERIAL SHALL BE REMOVED FROM SITE AND DISPOSED OF IN A PROPERLY PERMITTED FACILITY.
6. FILL AND COMPACTION SHOULD COMPLY WITH GEOTECHNICAL REPORT.
7. THE CONTRACTOR SHALL NOTE THAT THE GRADING PLAN MAY NOT REPRESENT A BALANCED EARTHWORK CONDITION. THE CONTRACTOR SHALL BE RESPONSIBLE FOR CUT AND FILL QUANTITIES AND COMPLETE INSTALLATION TO SPECIFIED GRADES.
8. THE CONTRACTOR SHALL FURNISH SUITABLE BORROW MATERIAL FROM AN OFF-SITE PROPERLY PERMITTED FACILITY AS REQUIRED.
9. THE CONTRACTOR IS RESPONSIBLE FOR THE LOCATION AND PROTECTION OF ALL EXISTING UTILITIES DURING CONSTRUCTION. BEFORE COMMENCING ANY EXCAVATIONS IN OR ALONG ROADWAYS OR RIGHT-OF-WAYS, PUBLIC AREAS OR IN PRIVATE EASEMENTS, THE CONTRACTOR SHALL NOTIFY ALL APPROPRIATE PERSONNEL OF THEIR INTENT TO EXCAVATE, IN WRITING, NOT LESS THAN 10 DAYS PRIOR TO EXCAVATING.
10. THE CONTRACTOR SHALL BE RESPONSIBLE TO COORDINATE DISCONNECTION/RECONNECTION AND/OR THE RELOCATION OF ALL EXISTING UTILITIES WITH APPROPRIATE PERSONNEL.
11. EXISTING SURVEYING PROVIDED BY PORT CITY GEOMATICS & SUPPLIED BY OWNER.
12. THE CONTRACTOR SHALL FIELD VERIFY ALL DIMENSIONS AT THE SITE. FURTHERMORE THE CONTRACTOR SHALL REPORT ALL DISCREPANCIES OR QUESTIONS TO THE ENGINEER PRIOR TO INSTALLATION.
13. THE CONTRACTOR SHALL PROVIDE ANY AND ALL LAYOUT REQUIRED TO CONSTRUCT HIS WORK UNLESS OTHERWISE DIRECTED BY OWNER.
14. ALL PVC UTILITY MAINS SHALL BE INSTALLED WITH A MINIMUM OF 36" COVER AT FINAL GRADE.
15. ALL SERVICE CONNECTIONS SHALL BE INSTALLED TO MEET ALL LOCAL AND STATE CODES. METERS, TAPS, MATERIALS, WORKMANSHIP AND ALL FEES SHALL BE THE RESPONSIBILITY OF THE CONTRACTOR AND SHALL COMPLY WITH ALL REQUIREMENTS.
16. ALL PAVEMENT, BASE AND SUBGRADE SHALL CONFORM TO NCDOT STANDARDS INCLUDING WORKMANSHIP, MATERIALS AND EQUIPMENT. APPROPRIATE BARRICADES, SIGNS, LIGHTS OR OTHER TRAFFIC CONTROL DEVICES SHALL BE PROVIDED IN ACCORDANCE WITH NCDOT TO MAINTAIN SAFETY AND TWO WAY TRAFFIC.
17. ALL AREAS SHALL BE GRADED FOR POSITIVE DRAINAGE. THE CONTRACTOR SHALL REPORT ANY DISCREPANCIES TO THE ENGINEER PRIOR TO INSTALLATION. ALL AREAS SHALL BE SLOPED TO DRAIN AWAY FROM BUILDINGS AT ALL TIMES.
18. CONCRETE STORM DRAINAGE PIPE SHALL BE CLASS III WITH RUBBER GASKETED JOINTS AND INSTALLED IN ACCORDANCE WITH MANUFACTURER'S REQUIREMENTS.
19. USE WHITE LANE MARKING PAINT FOR ALL PAVEMENT MARKINGS. PAINT SHALL BE A CHLORINATED RUBBER ALKYD, FS TT-P-115, TYPE III, FACTORY MIXED, QUICK DRYING, NON BLEEDING. REFLECTIVE MATERIAL MAY BE ADDED AT OWNER'S OPTION FOR NIGHT REFLECTING.
20. DUCTILE IRON SHALL BE CLASS 50.
21. CONCRETE FOR WALKS, CURBS AND DRIVES SHALL HAVE A MINIMUM COMPRESSIVE STRENGTH OF 3000 PSI @ 28 DAYS – AIR ENTRAINED.
22. FIELD TESTING SHALL BE DONE BY AN INDEPENDENT TESTING LABORATORY PAID FOR BY THE OWNER. FURTHER TESTING REQUIRED DUE TO A FAILED TEST WILL BE PAID FOR BY THE CONTRACTOR.
23. SEE GEOTECHNICAL REPORT NO. __________, DATED ________, BY __________ ________ FOR ADDITIONAL REQUIREMENTS.

CONSTRUCTION SEQUENCE
1. NO CUT SLOPE OR FILL SLOPE SHALL EXCEED A RISE OR FALL OF ONE FOOT FOR EVERY RUN OF 3 FEET (1 VERTICAL TO 3 HORIZONTAL).
2. NO SEDIMENT WILL BE ALLOWED TO EXIT THE SITE. ALL EROSION SHALL BE CONTROLLED INCLUDING SIDE SLOPES DURING AND AFTER CONSTRUCTION.
3. INSTALL PRIMARY EROSION CONTROL MEASURES BEFORE BEGINNING CONSTRUCTION INCLUDING BUT NOT LIMITED TO GRAVELED CONSTRUCTION ENTRANCE, SILT FENCE, CHECK DAMS, ETC. INSTALL ALL SECONDARY EROSION CONTROL MEASURES AS SOON AS POSSIBLE AFTER BEGINNING CONSTRUCTION.
4. ALL EROSION CONTROL MEASURES TO BE INSPECTED AFTER EACH RAIN. SILT FENCE AND INLET PROTECTION ARE TO BE CLEANED WHEN 0.5 FEET OF SEDIMENT HAVE ACCUMULATED IN FRONT OF THE DEVICE OR WHEN THEY LEAK OR FAIL. SEDIMENT TRAPS ARE CLEANED OUT AS STATED OR WHEN HALF FULL.
5. IF APPLICABLE, CONSTRUCT PROPOSED RETENTION POND TO ACT AS A SEDIMENT BASIN DURING CONSTRUCTION. REMOVE ACCUMULATION OF SILT AS REQUIRED TO ALLOW PROPER FUNCTIONING. RESTORE POND TO DESIGN LEVELS AT THE COMPLETION OF CONSTRUCTION.
6. IF APPLICABLE, INSTALL DROP INLETS WITH INLET PROTECTION TO ACT AS SILT TRAPS DURING CONSTRUCTION. REMOVE ACCUMULATED SILT AS NEEDED TO PREVENT SILT FROM ENTERING STORM DRAIN PIPING.
7. A 4" LAYER OF TOPSOIL SHALL BE APPLIED TO ALL NEW AREAS TO BE GRASSED.
8. MAINTAIN ALL EROSION CONTROL MEASURES UNTIL PROJECT IS COMPLETE.
9. MORE STRINGENT MEASURES MAY BE REQUIRED TO HALT EROSION IF THOSE ON THIS PLAN PROVE TO BE LESS EFFECTIVE.
10. REMOVE ALL TEMPORARY EROSION CONTROL MEASURES UPON COMPLETION OF CONSTRUCTION. ALL PERMANENT MEASURES SHALL BE WELL ESTABLISHED PRIOR TO PROJECT COMPLETION.

MAINTENANCE PLAN
1. ALL EROSION AND SEDIMENT CONTROL PRACTICES WILL BE CHECKED FOR STABILITY AND OPERATION FOLLOWING EVERY RUNOFF-PRODUCING RAINFALL, BUT IN NO CASE, LESS THAN ONCE EVERY WEEK AND WITHIN 24 HOURS OF EVERY HALF INCH RAINFALL.
2. ALL POINTS OF EGRESS WILL HAVE CONSTRUCTION ENTRANCES THAT WILL BE PERIODICALLY TOP-DRESSED WITH AN ADDITIONAL 2 INCHES OF #4 STONE TO MAINTAIN PROPER DEPTH. THEY WILL BE MAINTAINED IN A CONDITION TO PREVENT MUD OR SEDIMENT FROM LEAVING THE SITE. IMMEDIATELY REMOVE OBJECTIONABLE MATERIAL SPILLED, WASHED OR TRACKED ONTO THE CONSTRUCTION ENTRANCE OR ROADWAYS.
3. SEDIMENT WILL BE REMOVED FROM HARDWARE CLOTH AND GRAVEL INLET PROTECTION, BLOCK AND GRAVEL INLET, ROCK DOUGHNUT INLET PROTECTION AND ROCK PIPE INLET PROTECTION WHEN THE DESIGNED STORAGE CAPACITY HAS BEEN HALF FILLED WITH SEDIMENT. ROCK WILL BE CLEANED OR REPLACED WHEN THE SEDIMENT POOL NO LONGER DRAINS AS DESIGNED. DEBRIS WILL BE REMOVED FROM THE ROCK AND HARDWARE CLOTH TO ALLOW PROPER DRAINAGE. SILT SACKS WILL BE EMPTIED ONCE A WEEK AND AFTER EVERY RAIN EVENT. SEDIMENT WILL BE REMOVED FROM AROUND BEAVER DAMS, DANDY SACKS AND SOCKS ONCE A WEEK AND AFTER EVERY RAIN EVENT.
4. DIVERSION DITCHES WILL BE CLEANED OUT IMMEDIATELY TO REMOVE SEDIMENT OR OBSTRUCTIONS FROM THE FLOW AREA. THE DIVERSION RIDGES WILL ALSO BE REPAIRED. SWALES MUST BE TEMPORARILY STABILIZED WITHIN 21 CALENDAR DAYS OF CEASE OF ANY PHASE OF ACTIVITY ASSOCIATED WITH A SWALE.
5. SEDIMENT WILL BE REMOVED FROM BEHIND THE SEDIMENT FENCE WHEN IT BECOMES HALF FILLED. THE SEDIMENT FENCE WILL BE REPAIRED AS NECESSARY TO MAINTAIN A BARRIER. STAKES MUST BE STEEL. STAKE SPACING WILL BE 6 FEET MAX. WITH THE USE OF EXTRA STRENGTH FABRIC, WITHOUT WIRE BACKING. STAKE SPACING WILL BE 8 FEET MAX. WHEN STANDARD STRENGTH FABRIC AND WIRE BACKING ARE USED. IF ROCK FILTERS ARE DESIGNED AT LOW POINTS IN THE IN THE SEDIMENT FENCE THE ROCK WILL BE REPAIRED OR REPLACED IF IT BECOMES HALF FULL OF SEDIMENT, NO LONGER DRAINS AS DESIGNED OR IS DAMAGED.
6. SEDIMENT WILL BE REMOVED FROM SEDIMENT TRAPS WHEN THE DESIGNED STORAGE CAPACITY HAS BEEN HALF FILLED WITH SEDIMENT. THE ROCK WILL BE CLEANED OR REPLACED WHEN THE SEDIMENT POOL NO LONGER DRAINS OR WHEN THE ROCK IS DISLODGED. BAFFLES WILL BE REPAIRED OR REPLACED IF THEY COLLAPSE, TEAR, DECOMPOSE OR BECOME INEFFECTIVE. THEY WILL BE REPLACED PROMPTLY. SEDIMENT WILL BE REMOVED WHEN DEPOSITS REACH HALF THE HEIGHT OF THE 1ST BAFFLE. FLOATING SKIMMERS WILL BE INSPECTED WEEKLY AND WILL BE KEPT CLEAN.
7. SEDIMENT WILL BE REMOVED FROM THE SEDIMENT BASIN WHEN THE DESIGN STORAGE CAPACITY HAS BEEN HALF FILLED WITH SEDIMENT. ROCK WILL BE CLEANED OR REPLACED WHEN THE SEDIMENT POOL NO LONGER DRAINS OR IF THE ROCK IS DISLODGED. BAFFLES WILL BE REPAIRED OR REPLACED IF THEY TEAR, DECOMPOSE OR BECOME INEFFECTIVE. THEY WILL BE REPLACED PROMPTLY. SEDIMENT WILL BE REMOVED FROM BAFFLES WHEN DEPOSITS REACH HALF THE HEIGHT OF THE 1ST BAFFLE. FLOATING SKIMMERS WILL BE INSPECTED WEEKLY AND WILL BE KEPT CLEAN.
8. ALL SEEDED AREAS WILL BE FERTILIZED, RESEEDED AS NECESSARY, AND MULCHED ACCORDING TO SPECIFICATIONS IN THE VEGETATIVE PLAN TO MAINTAIN A VIGOROUS, DENSE VEGETATIVE COVER. ALL SLOPES WILL BE STABILIZED WITHIN 21 CALENDAR DAYS. ALL OTHER AREAS WILL BE STABILIZED WITHIN 15 WORKING DAYS.
9. FLOCCULATES WILL BE USED TO ADDRESS TURBIDITY ISSUES. THE PUMPS, TANKS, HOSES AND INJECTION SYSTEMS WILL BE CHECKED FOR PROBLEMS OR TURBID DISCHARGES DAILY.

SITE POLLUTANTS NOTES
1. LOCATE AREAS DEDICATED FOR MANAGEMENT OF LAND CLEARING AND DEMOLITION DEBRIS, CONSTRUCTION AND DOMESTIC WASTE, AND HAZARDOUS OR TOXIC WASTE. THIS LOCATION SHALL BE AT LEAST 50' AWAY FROM STORM DRAIN INLETS AND SURFACE WATERS UNLESS IT CAN BE SHOWN THAT NO OTHER ALTERNATIVES ARE REASONABLY AVAILABLE.
2. DUMPING OF PAINT OR OTHER LIQUID BUILDING MATERIAL WASTES IN STORM DRAINS IS PROHIBITED.
3. LITTER AND SANITARY WASTE-THE PERMITTEE SHALL CONTROL THE MANAGEMENT AND DISPOSAL OF LITTER AND SANITARY WASTE FROM THE SITE.
4. LOCATE EARTHEN-MATERIAL STOCK PILE AREAS AT LEAST 50' AWAY FROM STORM DRAIN INLETS AND SURFACE WATERS UNLESS IT CAN BE SHOWN THAT NO OTHER ALTERNATIVES ARE REASONABLY AVAILABLE.
5. CONCRETE MATERIALS ONSITE, INCLUDING EXCESS CONCRETE, MUST BE CONTROLLED AND MANAGED TO AVOID CONTACT WITH SURFACE WATERS, WETLANDS OR BUFFERS. NO CONCRETE OR CEMENT SLURRY SHALL BE DISCHARGED FROM THE SITE.
6. ANY HARDENED CONCRETE RESIDUE WILL BE DISPOSED OF, OR RECYCLED ON SITE, IN ACCORDANCE WITH LOCAL AND STATE SOLID WASTE REGULATIONS.
7. SOIL STABILIZATION SHALL BE ACHEIVED ON ANY AREA OF A SITE WHERE LAND-DISTURBING ACTIVITIES HAVE TEMPORARILY OR PERMANENTLY CEASED ACCORDING TO THE FOLLOWING SCHEDULE:
i. ALL PERIMETER DIKES, SWALES, DITCHES, PERIMETER SLOPES AND ALL SLOPES STEEPER THAN 3 HORIZONTAL TO 1 VERTICAL (3:1) SHALL BE PROVIDED TEMPORARY OR PERMANENT STABILIZATION WITH GROUND COVER AS SOON AS PRACTICABLE BUT IN ANY EVENT WITHIN 7 CALENDAR DAYS FROM THE LAST LAND DISTURBING ACTIVITY.
ii. ALL OTHER DISTURBED AREAS SHALL BE PROVIDED TEMPORARY OR PERMANENT STABILIZATION WITH GROUND COVER AS SOON AS PRACTICABLE BUT IN ANY EVENT WITHIN 14 CALENDAR DAYS FROM THE LAST LAND-DISTURBING ACTIVITY.
8. CONDITIONS-IN MEETING THE STABILIZATION REQUIREMENTS ABOVE, THE FOLLOWING CONDITIONS OR EXEMPTIONS SHALL APPLY:
i. EXTENSIONS OF TIME MAY BE APPROVED BY THE PERMITTING AUTHORITY BASED ON WEATHER OR OTHER SITE-SPECIFIC CONDITIONS THAT MAKE COMPLIANCE IMPRACTICABLE.
ii. ALL SLOPES 50' IN LENGTH OR GREATER SHALL APPLY TO GROUND COVER WITHIN 7 DAYS EXCEPT WHEN THE SLOPE IS FLATTER THAN 4:1. SLOPES LESS THAN 50' SHALL APPLY GROUND COVER WITHIN 14 DAYS EXCEPT WHEN SLOPES ARE STEEPER THAN 3:1, THE 7-DAY REQUIREMENT APPLIES.
iii. ANY SLOPED AREA FLATTER THAN 4:1 SHALL BE EXEMPT FROM THE 7-DAY GROUND COVER REQUIREMENT.
iv. SLOPES 10' OR LESS IN LENGTH SHALL BE EXEMPT FROM THE 7-DAY GROUND COVER REQUIREMENT EXCEPT WHEN THE SLOPE IS STEEPER THAN 2:1.
v. ALTHOUGH STABILIZATION IS USUALLY SPECIFIED AS GROUND COVER, OTHER METHODS, SUCH AS CHEMICAL STABILIZATION, MAY BE ALLOWED ON A CASE-BY-CASE BASIS.
vi. FOR PORTIONS OF PROJECTS WITHIN THE SEDIMENT CONTROL COMMISSION-DEFINED "HIGH QUALITY WATER ZONE" (15A NCAC 04A. 0105), STABILIZATION WITH GROUND COVER SHALL BE ACHIEVED AS SOON AS PRACTICABLE BUT IN ANY EVENT ON ALL AREAS OF THE SITE WITHIN 7 CALENDAR DAYS FROM THE LAST LAND-DISTURBING ACT.

REVISIONS		
No./Date	Description	By

DETAILS AND NOTES

TRU & TAPESTRY HOTEL
5001 MARKET STREET
WILMINGTON, NORTH CAROLINA

TRIPP ENGINEERING, P.C.
419 Chestnut Street
Wilmington, North Carolina 28401
Phone 910-763-5100
Email trippeng@ec.rr.com

© 2015 TRIPP ENGINEERING, P.C.
NC LICENSE No. C-1427

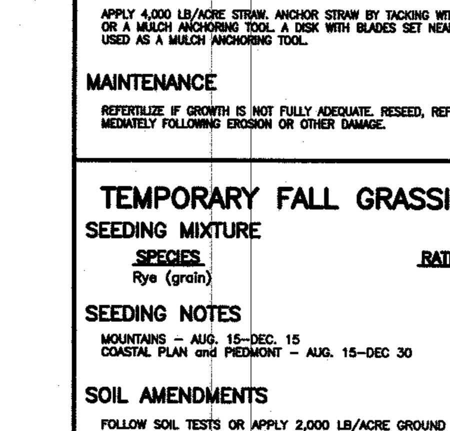

DATE 02-05-19
DESIGN PGT
DRAWN JET

C4

SHEET 4 OF 5

17068

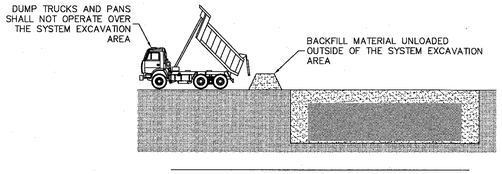

DUMP TRUCK DETAIL (SEE NOTE 3)

NOTES:

1. FOLLOWING PLACEMENT OF SIDE BACKFILL, A UNIFORM 12" LIFT OF THE FREELY DRAINING MATERIAL (SPEC SECTION 2.03 B) SHALL BE PLACED OVER THE R-TANK AND LIGHTLY COMPACTED USING A WALK-BEHIND TRENCH ROLLER. ALTERNATELY, A ROLLER (MAXIMUM GROSS VEHICLE WEIGHT OF 6 TONS) MAY BE USED. ROLLER MUST REMAIN IN STATIC MODE UNTIL A MINIMUM OF 24" OF COVER HAS BEEN PLACED OVER THE MODULES. SHEEP FOOT ROLLERS SHOULD NOT BE USED. **SPEC SECTION 3.05 A**
2. ONLY LOW PRESSURE TIRE OR TRACK VEHICLES (LESS THAN 7 PSI AND OPERATING WEIGHT OF LESS THAN 20,000 LBS) SHALL BE OPERATED OVER THE R-TANK SYSTEM DURING CONSTRUCTION. **SPEC SECTION 3.05 B**
3. DUMP TRUCKS AND PANS SHALL NOT BE OPERATED WITHIN THE R-TANK SYSTEM AT ANY TIME. WHERE NECESSARY, THE HEAVY EQUIPMENT SHOULD UNLOAD IN AN AREA ADJACENT TO THE R-TANK SYSTEM AND THE MATERIAL SHOULD BE MOVED OVER THE SYSTEM WITH TRACKED EQUIPMENT. **SPEC SECTION 3.05 B**
4. ENSURE THAT ALL UNRELATED CONSTRUCTION TRAFFIC IS KEPT AWAY FROM THE LIMITS OF EXCAVATION UNTIL THE PROJECT IS COMPLETE AND FINAL SURFACE MATERIALS ARE IN PLACE. NO NON-INSTALLATION RELATED LOADING SHOULD BE ALLOWED OVER THE R-TANK SYSTEM UNTIL THE FINAL DESIGN SECTION HAS BEEN CONSTRUCTED (INCLUDING PAVEMENT). **SPEC SECTION 3.05 C**
5. SEE R-TANK INSTALLATION GUIDE OR CONTACT YOUR LOCAL ACF REPRESENTATIVE FOR ADDITIONAL INFORMATION.

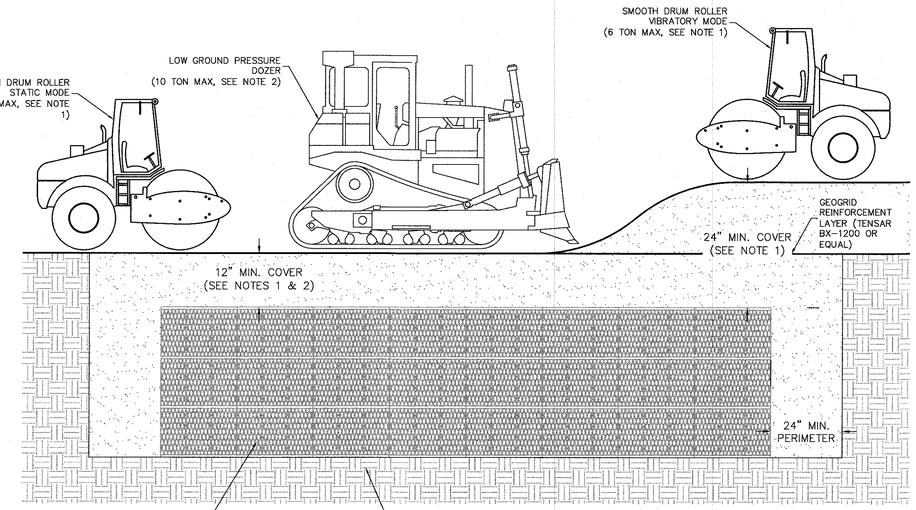

R-TANK HD CONSTRUCTION EQUIPMENT COVER DETAIL

NTS

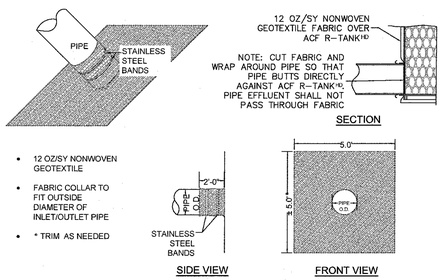

GEOTEXTILE BOOT FOR R-TANK HD DETAIL

NTS

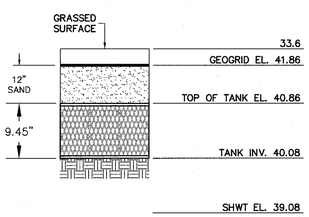

MINI R-TANK LD ELEVATION

NTS

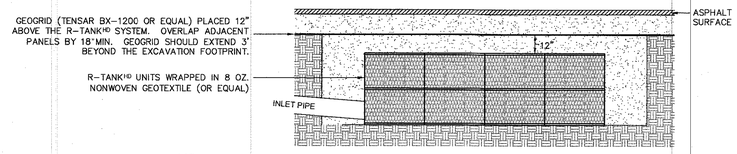

R-TANK HD TANK WRAP & EXCAVATION LINER DETAIL

NTS

NOTES

- THIS PORT IS USED TO PUMP WATER INTO THE SYSTEM AND RE-SUSPEND ACCUMULATED SEDIMENT SO THAT IT MAY BE PUMPED OUT.
- MINIMUM REQUIRED MAINTENANCE INCLUDES A QUARTERLY INSPECTION DURING THE FIRST YEAR OF OPERATION AND A YEARLY INSPECTION THEREAFTER. FLUSH AS NEEDED.
- ONLY R-TANK HD AND R-TANK SD MAY BE USED IN TRAFFIC APPLICATIONS.

DEPTH SUMMARY

TYPE	A	B
R-TANK	12" MIN - 36" MAX	AS SHOWN ON PLANS
R-TANK HD	20" MIN - 6.99' MAX	12"
R-TANK SD	18" MIN - 9.99' MAX	12"

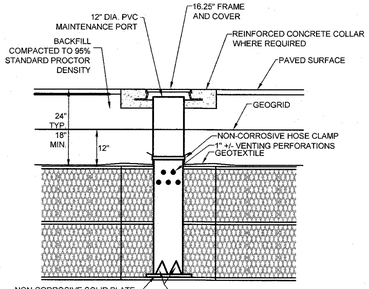

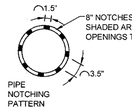

R-TANK HD TYPICAL MAINTENANCE PORT DETAIL

NTS

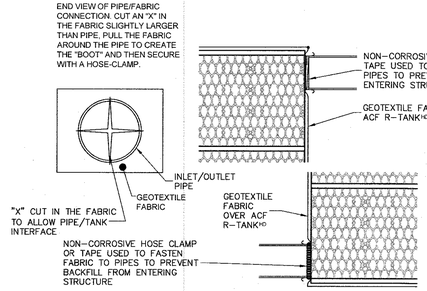

R-TANK HD TYPICAL TANK INLET/OUTLET DETAIL

NTS

PART 1 - GENERAL

1.01 Related Documents
A. Drawings, technical specification and general provisions of the Contract as modified herein apply to this section.

1.02 Description of Work Included
A. Provide excavation and base preparation per geotechnical engineer's recommendations and/or as shown on the design drawings, to provide adequate support for project design loads and safety from excavation sidewall collapse. Excavations shall be in accordance with the owner's and OSHA requirements.
B. Provide and install R-Tank, R-TankHD, or R-TankSD system (hereafter called R-Tank) and all related products including fill materials, geotextiles, geogrids, inlet and outlet pipe with connections per the manufacturer's installation guidelines provided in this section.
C. Provide and construct the cover of the R-Tank system including: stone backfill, structural fill cover, and pavement section as specified.
D. Protect R-Tank system from construction traffic after installation until completion of all construction activity in the installation area.

1.03 Quality Control
A. All materials shall be manufactured in ISO certified facilities.
B. Installation Contractor shall demonstrate the following experience
1. A minimum of three R-Tank or equivalent projects completed within 2 years; and,
2. A minimum of 25,000 cubic feet of storage volume completed within 2 years.
3. Contractor experience requirement may be waived if the manufacturer's representative provides on-site training and review during construction.
C. Installation Personnel: Performed only by skilled workers with satisfactory record of performance on bulk earthworks, pipe, chamber, or pond/landfill construction projects of comparable size and quality.
D. Contractor must have manufacturer's representative available for site review if requested by Owner.

1.04 Submittals
A. Submit proposed R-Tank layout drawings. Drawings shall include typical section details as well as the required base elevation of stone and tanks, minimum cover requirements and tank configuration.
B. Submit manufacturer's product data, including compressive strength and unit weight.
C. Submit manufacturer's installation instructions.
D. Submit R-Tank sample for review. Reviewed and accepted samples will be returned to the Contractor.
E. Submit material certificates for geotextile, geogrid, base course and backfill materials.
F. Submit required experience and personnel requirements as specified in Section 1.03.
G. Any proposed equal alternative product substitution to this specification must be submitted for review and approved prior to bid opening. Review package should include third party reviewed performance data that meets or exceeds criteria in Table 2.01 B.

1.05 Delivery, Storage, and Handling
A. Protect R-Tank and other materials from damage during delivery, and store UV sensitive materials under tarp to protect from sunlight when the from delivery to installation exceeds two weeks. Storage of materials should be on smooth surfaces, free from dirt, mud and debris.
B. Handling is to be performed with equipment appropriate to the materials and site conditions, and may include hand, handcart, forklifts, extension lifts, etc.
C. Cold weather:
1. Care must be taken when handling plastics when air temperature is 40 degrees or below as plastic becomes brittle.
2. Do not use frozen materials or materials mixed or coated with ice or frost.
3. Do not build on frozen ground or wet, saturated or muddy subgrade.

1.06 Preinstallation Conference.
A. Prior to the start of the installation, a preinstallation conference shall occur with the representatives from the design team, the general contractor, the excavation contractor, the R-Tank installation contractor, and the manufacturer's representative.

1.07 Project Conditions
A. Coordinate installation for the R-Tank system with other on-site activities to eliminate all non-installation related construction traffic over the completed R-Tank system. No loads heavier than the design loads shall be allowed over the system, and in no case shall loads higher than a standard AASHTO H20 (or H25, depending on design criteria) load be allowed on the system at any time.
B. Protect adjacent work from damage during R-Tank system installation.
C. All pre-treatment systems to remove debris and heavy sediments must be in place and functional prior to operation of the R-Tank system. Additional pretreatment measures may be needed if unit is operational during construction due to increased sediment loads.
D. Contractor is responsible for any damage to the system during construction.

PART 2 - PRODUCTS

2.01 R-Tank Units
A. R -Tank - Injection molded plastic tank plates assembled to form a 95% void modular structure of predesigned height (custom for each project).
B. R-Tank units shall meet the following Physical & Chemical Characteristics:

PROPERTY	DESCRIPTION	R-Tank HD VALUE	R-Tank SD VALUE	R-Tank DP VALUE
Void Area	Volume available for water storage	95%	95%	95%
Surface Void Area	Percentage of external available for infiltration	90%	90%	90%
Compressive Strength	ASTM D-2412 / ASTM F 2418	30.0 psi	33.4 psi	42.9 psi
HS-20 Minimum Cover	Cover required to support HS-20 loads	N/A	20"	16"
HS-20 Minimum Cover	Cover required to support HS-20 loads	N/A	24"	19"
Minimum Cover	Maximum allowable cover depth	3 feet	< 7 feet	< 10 feet
Unit Weight	Weight of plastic per cubic foot of tank	3.29 lbs/ cf	3.02 lbs/cf	3.96 lbs / cf
Rib Thickness	Thickness of load-bearing members	0.18 inches	0.18 inches	0.18 inches
Service Temperature	Safe temperature range for use	-14 – 167° F	-14 – 167° F	-14 – 167° F

2.02 Geosynthetics
A. Geotextile. A geotextile envelope is required to prevent backfill material from entering the R-Tank modules.
1. Standard Application: The standard geotextile shall be an 8 oz per square yard nonwoven geotextile (ACF N080 or equivalent).
2. Infiltration Applications: When water must infiltrate/exfiltrate through the geotextile as a function of the system design, a woven monofilament (ACF N200 or equivalent) shall be used.
B. Geogrid: For installations subject to traffic loads and/or when required by project plans, install geogrid (ACF X032 or equivalent) to reinforce backfill above the R-Tank system. Geogrid is often not required for non-traffic load applications.

2.03 Backfill & Cover Materials
A. Draining Materials: Stone (smaller than 1.5" in diameter) or soil (GW, GP, SW, or SP as classified by the Unified Soil Classification System) shall be used below the R-Tank system (2" minimum). Material must be free from lumps, debris, and any sharp objects that could cut the geotextile. Material shall be within 3 percent of the optimum moisture content as determined by ASTM D698 at the time of installation. For infiltration applications bedding material shall be free draining.
B. Side and Top Backfill: Free draining stone (smaller than 1.5" in diameter) or soil (GW, GP, SW, or SP as classified by the Unified Soil Classification System) shall be used adjacent to (24" minimum) and above (for the first 12") the R-Tank system. Material must be free from lumps, debris and any sharp objects that could cut the geotextile. Material shall be within 3 percent of the optimum moisture content as determined by ASTM D698 at the time of installation.
C. Additional Cover Materials: Structural Fill shall consist of granular materials meeting the gradational requirements of SM, SP, SW, GM, GP or GW as classified by the Unified Soil Classification System. Structural Fill shall have a maximum of 25 percent passing the No. 200 sieve, shall have a maximum clay content of 18 percent and a maximum Plasticity Index of 4. Material shall be within 3 percent of the optimum moisture content as determined by ASTM D698 at the time of installation.

2.04 Other Materials
A. Utility Marker: Install metallic tape at corners of R-Tank system to mark the area for future utility detection.

PART 3 - EXECUTION

3.01 Assembly of R-Tank Units
A. On-site assembly of tanks shall be performed in accordance with the R-Tank Installation Manual, Section 2.

3.02 Layout and Excavation
A. Installer shall stake out, excavate, and prepare the subgrade area to the required plan grades and dimensions, ensuring that the excavation is at least 2 feet greater than R-Tank dimensions in each direction allowing for installation of geotextile filter fabric, R-Tank modules, and free draining backfill materials.
B. All excavations must be prepared with OSHA approved excavated sides and sufficient working space.
C. Protect partially completed installation against damage from other construction traffic by establishing a perimeter with high visibility construction tape, fencing, barricades, or other means until construction is complete.
D. Base of the excavation shall be uniform, level, and free of lumps or debris and soft or yielding subgrade areas. A minimum 2,000 pounds per square foot bearing capacity is required.
1. Standard Applications: Compact subgrade to a minimum of 95% of Standard Proctor (ASTM D698) density or as required by the Owner's engineer.
2. Infiltration Applications: Subgrade shall be prepared in accordance with the contract documents. Compaction of subgrade should not be performed in infiltration applications.
E. Unsuitable Soils or Conditions: All questions about the base of the excavation shall be directed to the owner's engineer, who will approve the subgrade conditions prior to placement of stone. The owner's engineer shall determine the required bearing capacity of the R-Tank subgrade; however in no case shall a bearing capacity of less than 2,000 pounds per square foot be provided.
1. If unsuitable soils are encountered at the subgrade, or if the subgrade is pumping or appears excessively soft, repair the area in accordance with contract documents and/or as directed by the owner's engineer.
2. If indications of the water table are observed during excavation, the engineer shall be contacted to provide recommendations.
3. Do not start installation of the R-Tank system until unsatisfactory subgrade conditions are corrected and the subgrade conditions are accepted by the owner's engineer.

3.03 Preparation of Base
A. Place a thin layer (3" unless otherwise specified) of bedding material (Section 2.03 A), over the subgrade to establish a level working platform for the R-Tank modules. Level to within ½" (+/- ½") or as shown on the plans. Native subgrade soils or other materials may be used if determined to meet the requirements of 2.03 A and are accepted by the owner's engineer.
1. Standard Applications: Static roll or otherwise compact bedding materials until they are firm and unyielding.
2. Infiltration Applications: Bedding materials shall be prepared in accordance with the contract documents.
B. Outline the footprint of the R-Tank system on the excavation floor using spray paint or chalk line to ensure a 2' perimeter is available around the R-Tank system for proper installation and compaction of backfill.

3.04 Installation of the R-Tanks
A. Where a geotextile wrap is specified on the stone base, cut strips to length and install in excavation, removing wrinkles so material lays flat. Overlap geotextile a minimum 12" or as recommended by manufacturer.
B. Where an impervious liner (for containment) is specified, install the liner per manufacturer's recommendations and the contract documents. The R-Tank units shall be separated from impervious liner by a non-woven geotextile fabric installed accordance with Section 3.04A.
C. Install R-Tank modules by placing side by side, in accordance with the design drawings. No lateral connections are required. It is advisable to use a string line to form square corners and straight edges along the perimeter of the R-Tank system. The modules are to be oriented as per the design drawing (15.25' x 28.125') with required depth as shown on plans. The large side plate of the tank should be placed on the perimeter of the system. This will typically require that the two ends of the tank area will have a row of tanks placed perpendicular to all other tanks. If this is not shown in the construction drawings, it is a simple field adjustment that will have minimal effect on the overall system footprint. Refer to R-Tank Installation Guide for more details.
D. Wrap the R-Tank top and sides in specified geotextile. Cut strips of geotextile so that it will cover the sides and top, encapsulating the entire system to prevent soil entry into the system. Overlap geotextile 12" or as recommended by manufacturer. Take great care to avoid damage to geotextile (and, if specified, impervious liner) during placement.
E. Identify locations of inlet, outlet and any other penetrations of the geotextile (and optional liner). These connections should be installed flush (butted up to the R-Tank) and the geotextile fabric shall be cut to enable hydraulic continuity between the connections and the R-Tank units. These connections shall be secured using pipe boots with stainless steel pipe clamps. Support pipe in trenches during backfill operations to prevent pipe from settling and damaging the geotextile, impervious liner (if specified) or pipe. Connecting pipes at 90 degree angles facilitates construction, unless otherwise specified. Ensure end of pipe is installed snug against R-Tank system.
F. Install Inspection and Maintenance Ports in locations noted on plans. At a minimum one maintenance port shall be installed within 10' of each inlet & outlet connection, and with a maximum spacing of one maintenance port for every 2,500 square feet. Install all ports as noted in the R-Tank Installation Guide.
G. If required, install ventilation pipes and vents as specified on drawings to provide ventilation for proper hydraulic performance. The number of pipes and vents will depend on the size of the system. Vents are often installed using a 90 degree elbow with PVC pipe into a landscaped area with 10' bend or venting bollard to inhibit the ingress of debris. A ground level concrete or steel cover can be used.

3.05 Backfilling of the R-Tank Units
A. Backfill and fill with recommended materials as follows:
1. Place freely draining backfill materials (Section 2.03 B) around the perimeter in lifts with a maximum thickness of 12". Each lift shall be placed around the entire perimeter such that each lift is no more than 24" higher than the side backfill along any other location on the perimeter of the R-Tank system. No fill shall be placed over top of tanks until the side backfill has been completed.
2. Each lift shall be compacted at the specified moisture content to a minimum of 95% of the Standard Proctor Density until no further densification is observed (for self-compacting stone materials). The side lifts must be compacted with walk behind compaction equipment. Even when 'self-compacting' backfill materials are selected, a walk behind vibratory compactor must be used.
3. Take care to ensure that the compaction process does not allow the machinery to come into contact with the modules due to the potential for damage to the geotextile and R-Tank units.
4. No compaction equipment is permissible to operate directly on the R-Tank modules.
5. Following placement of side backfill, a uniform 12" lift of the freely draining material (Section 2.03 B) shall be placed over the R-Tank and lightly compacted using a walk-behind trench roller. Alternately, a roller (maximum gross vehicle weight of 6 tons) may be used. Roller must remain in static mode until a minimum of 24" of cover has been placed over the modules. Sheep foot rollers should not be used.
6. Install a geogrid (required for traffic applications) over the initial 12" lift of backfill. Geogrid shall extend a minimum of 3 feet beyond the limits of the excavation wall.
7. Following placement and compaction of the initial cover, subsequent lifts of structural Fill (Section 2.03 C) shall be placed at the specified moisture content and compacted to a minimum of 95% of the Standard Proctor Density and shall cover the entire footprint of the R-Tank system. During placement of Fill above the system, unless otherwise specified, a uniform elevation of Fill shall be maintained to within 12" across the footprint of the R-Tank system. Do not exceed maximum cover depths listed in Table 2.01 B.
8. Place additional layers of geotextile and/or geogrid at elevations as specified in the design details. Each layer of geosynthetic reinforcement placed above the R-Tank system shall extend a minimum of 3 feet beyond the limits of the excavation wall.
9. Only low pressure tire or track vehicles shall be operated over the R-Tank system during construction. No machinery should drive on top of the tank until a minimum of [illegible] backfill and compaction is achieved. Dump trucks and Pans shall not be operated within the R-Tank system footprint at any time. Where necessary the heavy equipment should unload in an area adjacent to the R-Tank system and the material should be moved over the system with tracked equipment.
C. Ensure that all unrelated construction traffic is kept away from the limits of excavation until the project is complete and final surface materials are in place. No non-installation related loading should be allowed over the R-Tank system until the final design section has been constructed (including pavement).
D. Place surfacing materials, such as groundcovers (no large trees), or paving materials over the structure with care to avoid displacement of cover Fill and damage to surrounding areas.
E. Backfill depth over R-Tank system must be within the limitations shown in the table in Section 2.01 B. If the total backfill depth does not comply with this table, contact engineer or manufacturer's representative for assistance.

PART 4 - USING THE SYSTEM

4.01 Maintenance Requirements
A. A routine maintenance effort is required to ensure proper performance of the R-Tank system. The Maintenance program should be focused on pretreatment systems. Ensuring these structures are clean and functioning properly will reduce the risk of contamination of the R-Tank system and stormwater released from the site. Pre-treatment systems shall be inspected yearly, or as directed by the regulatory agency and by the manufacturer (for proprietary systems). Maintain as needed using acceptable practices or following manufacturer's guidelines (for proprietary systems).
B. Inspection and/or Maintenance Ports: In the R-Tank system will need to be inspected for accumulation of sediments at least quarterly through the first year of operation and at least yearly thereafter. This is done by removing the cap of the port and using a measuring device long enough to reach the bottom of the R-Tank system and stiff enough to push through the loose sediments, allowing a depth measurement.
C. If sediment has accumulated to the level noted in the R-Tank Maintenance Guide or beyond a level acceptable to the Owner's engineer, the R-Tank system should be flushed.
D. A flushing event consists of pumping water into the Maintenance Port and/or adjacent structure, allowing the turbulent flows through the R-Tank system to re-suspend the fine sediments. If multiple Maintenance Ports have been installed, water should be pumped into each port to maximize flushing efficiency. Sediment-laden water can be filtered through a filtrbag or approved equivalent if permitted by the locality.

CITY OF WILMINGTON NORTH CAROLINA
Public Services • Engineering Division
APPROVED STORMWATER MANAGEMENT PLAN
Date: _____ Permit #_____
Signed: _____

Approved Construction Plan

	Name	Date
Planning		
Traffic		
Fire		

For each open utility cut of City streets, a $325 permit shall be required from the City prior to occupancy and/or project acceptance.

REVISIONS

No./ Date	Description	By

DETAILS AND NOTES

TRU & TAPESTRY HOTEL
5001 MARKET STREET
WILMINGTON, NORTH CAROLINA

TRIPP ENGINEERING, P.C.
419 Chestnut Street
Wilmington, North Carolina 28401
Phone 910-763-5100
Email tripperg@ec.rr.com
© NC License No. C-1227

NORTH CAROLINA PROFESSIONAL SEAL 17374 ENGINEER PHILIP GREGORY TRIPP
2-5-19

DATE 02-05-19
DESIGN PGT
DRAWN JET

C5

SHEET 5 OF 5

17068

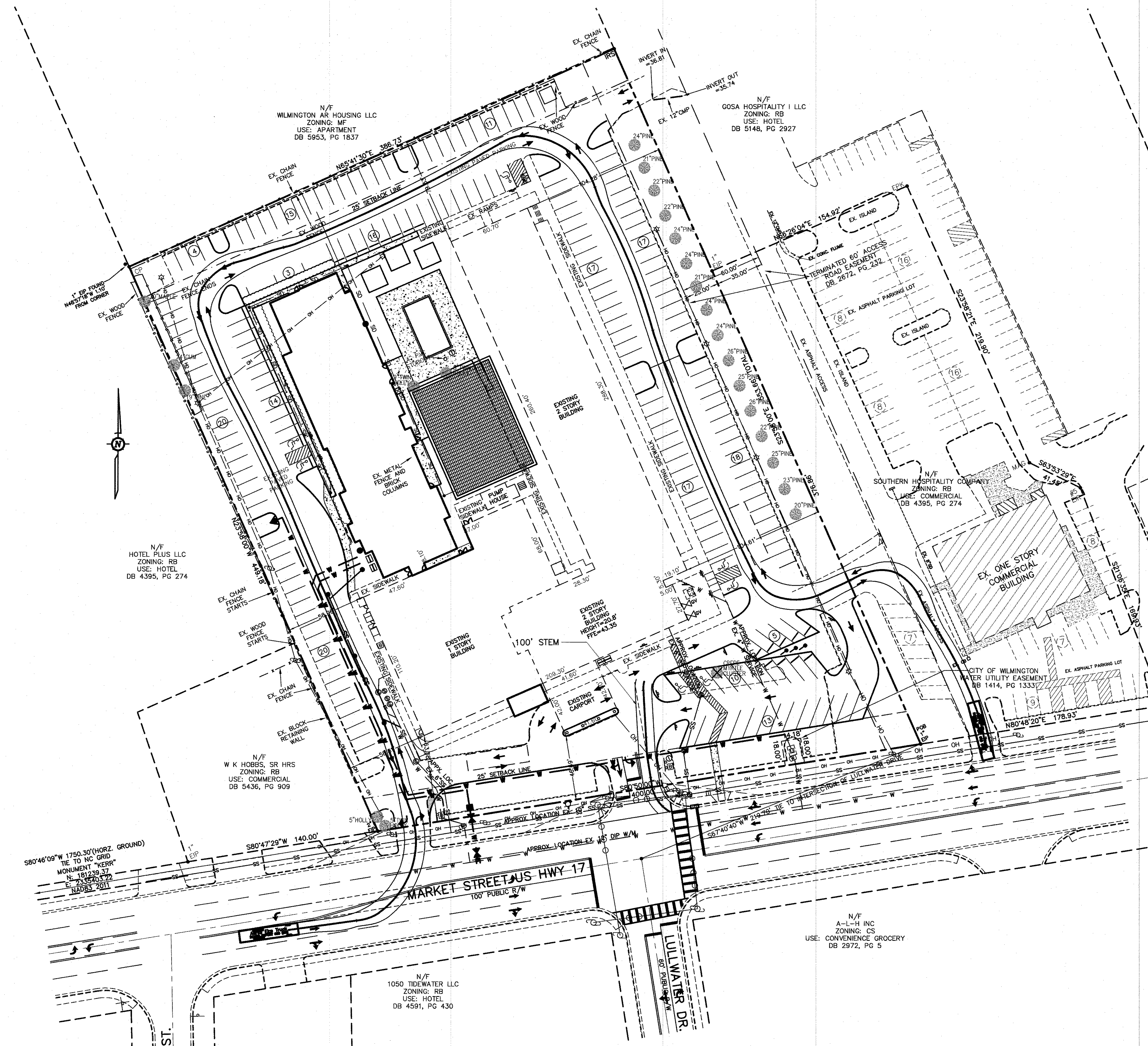

SITE PLAN

BAR SCALE 1"=40'

40' 20' 0' 40' 80' 120'

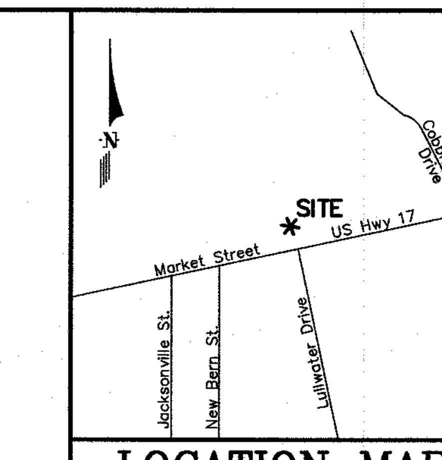

LOCATION MAP

NTS

NOTES:

ZONING
1) TOPOGRAPHY COMPLETED BY PORT CITY GEOMATICS, LTD.
2) PERMITTING OF BUSINESS IDENTIFICATION SIGNAGE IS A SEPARATE PROCESS. CITY OF WILMINGTON WILL NOT ALLOW OBSTRUCTIONS WITHIN THE RIGHT-OF-WAY.
3) CONTRACTOR SHALL FIELD VERIFY SIZE, MATERIAL, INVERTS AND LOCATION OF ALL EXISTING UTILITIES PRIOR TO INSTALLATION OF PROPOSED CONNECTIONS.
4) EXISTING EASEMENTS AS SHOWN
5) CONTRACTOR SHALL MAINTAIN ALL-WEATHER ACCESS FOR EMERGENCY VEHICLES AT ALL TIMES DURING CONSTRUCTION.
6) UNDERGROUND FIRE LINE(S) MUST BE PERMITTED AND INSPECTED BY THE WILMINGTON FIRE DEPARTMENT FROM THE PUBLIC RIGHT-OF-WAY TO THE BUILDING. CONTACT THE WILMINGTON FIRE DEPARTMENT DIVISION OF FIRE AND LIFE SAFETY AT 910-341-0696.

SOLID WASTE
1) SITE TO USE DUMPSTER.

TRAFFIC
1) ALL PAVEMENT MARKINGS IN PUBLIC RIGHTS-OF-WAY AND FOR DRIVEWAYS ARE TO BE THERMOPLASTIC AND MEET CITY AND/OR NCDOT STANDARDS.
2) TRAFFIC CONTROL DEVICES (INCLUDING SIGNS AND PAVEMENT MARKINGS) IN AREAS OPEN TO PUBLIC TRAFFIC ARE TO MEET MUTCD (MANUAL ON UNIFORM TRAFFIC CONTROL DEVICES) STANDARDS.
3) CONTACT TRAFFIC ENGINEERING AT 910-341-7888 TO ENSURE THAT ALL TRAFFIC SIGNALS FACILITIES AND EQUIPMENT ARE SHOWN ON THE PLAN.
4) CALL TRAFFIC ENGINEERING AT 910-341-7888 FORTY-EIGHT HOURS PRIOR TO ANY EXCAVATION IN THE RIGHT-OF-WAY.
5) ANY BROKEN OR MISSING SIDEWALK PANELS, DRIVEWAY PANELS AND CURBING WILL BE REPLACED.
6) CONTACT 910-341-7888 TO DISCUSS STREET LIGHTING OPTIONS.
7) ALL TRAFFIC CONTROL SIGNS AND MARKINGS OFF THE RIGHT-OF-WAY ARE TO BE MAINTAINED BY THE PROPERTY OWNER IN ACCORDANCE WITH MUTCD STANDARDS.
8) NO ROWS TO BE CLOSED.
9) NO STREETS PROPOSED.
10) OFF SITE PARKING PROPOSED AS SHOWN.
11) DRIVEWAYS TO MEET CITY STANDARDS.
13) ALL PARKING STALL MARKINGS AND LANE ARROWS WITHIN THE PARKING AREAS SHALL BE WHITE.
14) STOP SIGNS AND STREET SIGNS TO REMAIN IN PLACE DURING CONSTRUCTION.
15) TACTILE WARNING MATS WILL BE INSTALLED ON ALL WHEELCHAIR RAMPS.
16) POSTED SPEED LIMIT 40 MPH.

LANDSCAPING
1) A LANDSCAPING PLAN INDICATING THE LOCATION OF REQUIRED STREET TREES SHALL BE SUBMITTED TO THE CITY OF WILMINGTON TRAFFIC ENGINEERING DIVISION AND THE PARKS AND RECREATION DEPARTMENT FOR REVIEW AND APPROVAL PRIOR TO THE RECORDING OF THE FINAL PLAT.
2) NO OBSTRUCTIONS ARE PERMITTED IN THE SPACE BETWEEN THIRTY (30) INCHES AND TEN (10) FEET ABOVE THE GROUND WITHIN THE TRIANGULAR SITE DISTANCE.
3) PRIOR TO ANY CLEARING, GRADING OR CONSTRUCTION ACTIVITY, TREE PROTECTION FENCING WILL BE INSTALLED AROUND PROTECTED TREES OR GROVES OF TREES AND NO CONSTRUCTION WORKERS, TOOLS, MATERIALS, OR VEHICLES ARE PERMITTED WITHIN THE TREE PROTECTION FENCING.
4) ANY TREES AND/OR AREAS DESIGNATED TO BE PROTECTED MUST BE PROPERLY BARRICADED WITH FENCING AND PROTECTED THROUGHOUT CONSTRUCTION TO INSURE THAT NO CLEARING, GRADING OR STAGING OF MATERIALS WILL OCCUR IN THOSE AREAS.
5) NO EQUIPMENT IS ALLOWED ON SITE UNTIL ALL TREE PROTECTION FENCING AND SILT FENCING IS INSTALLED AND APPROVED. PROTECTIVE FENCING IS TO BE MAINTAINED THROUGHOUT THE DURATION OF THE PROJECT AND CONTRACTORS SHALL RECEIVE ADEQUATE INSTRUCTIONS ON TREE PROTECTION METHODS.
6) ALL PROPOSED VEGETATION WITHIN SIGHT TRIANGLES SHALL NOT INTERFERE WITH CLEAR VISUAL SIGHT LINES FROM 30"-10'.

CFPUA
1) WATER AND SEWER SERVICE SHALL MEET CAPE FEAR PUBLIC UTILITY AUTHORITY (CFPUA) DETAILS AND SPECIFICATIONS.
2) PROJECT SHALL COMPLY WITH THE CFPUA CROSS CONNECTION CONTROL REQUIREMENTS. WATER METER(S) CANNOT BE RELEASED UNTIL ALL REQUIREMENTS ARE MET AND THE STATE HAS GIVEN THEIR FINAL APPROVAL.
3) IF THE CONTRACTOR DESIRES CFPUA WATER FOR CONSTRUCTION, HE SHALL APPLY IN ADVANCE FOR THIS SERVICE AND MUST PROVIDE A REDUCED PRESSURE ZONE (RPZ) BACKFLOW PREVENTION DEVICE ON THE DEVELOPERS SIDE OF THE WATER METER BOX.
4) ANY IRRIGATION SYSTEM SUPPLIED BY CFPUA WATER SHALL COMPLY WITH THE CFPUA'S CONNECTION CONTROL REGULATION. CALL 910-332-6419 FOR INFORMATION.
5) ANY BACKFLOW PREVENTION DEVICES REQUIRED BY CFPUA WILL NEED TO BE ON THE LIST OF APPROVED DEVICES FOR USCFCCCHR OR ASSE.
6) PUBLIC WATER MAIN EXTENSION AND WATER SERVICES PROPOSED. SANITARY SEWER SERVICE PROPOSED.
7) CONTACT THE NORTH CAROLINA ONE CALL CENTER AT 1-800-632-4949 PRIOR TO DOING ANY DIGGING, CLEARING OR GRADING.
8) ANY IRRIGATION SYSTEM SHALL BE EQUIPPED WITH A RAIN AND FREEZER SENSOR.
9) CONTRACTOR TO FIELD VERIFY EXISTING WATER AND SEWER SERVICE LOCATIONS, SIZES AND MATERIALS PRIOR TO CONSTRUCTION. ENGINEER TO BE NOTIFIED OF ANY CONFLICTS.
10) A UTILITY CUT PERMIT IS REQUIRED FOR EACH OPEN CUT OF A CITY STREET. CONTACT 910-341-5888 FOR MORE DETAILS.

DRAINAGE
1) SHEET FLOW TO PROPOSED INLETS TO PROPOSED WET DETENTION BASIN, TO EITHER PIPE WRAPPED IN 18" OF SAND THEN TO A LEVEL SPREADER/FILTER STRIP BEFORE DISCHARGING AT A NON-EROSIVE VELOCITY TO EXISTING WETLANDS AND STREAM OR BYPASS TO OUTLET PIPE BEFORE DISCHARGING AT A NON-EROSIVE VELOCITY TO EXISTING WETLANDS AND STREAM.

UNDERGROUND UTILITIES
1) ALL ELECTRIC, CABLE TELEVISION AND TELEPHONE FACILITIES, FIRE ALARM CONDUITS, STREET LIGHTING WIRING AND OTHER WIRING CONDUITS AND SIMILAR FACILITIES SHALL BE PLACED UNDERGROUND BY THE DEVELOPER OR THE APPROPRIATE UTILITY COMPANY.
2) A MINIMUM COVER OF 30-INCHES OVER ALL PROPOSED WATER LINES SHALL BE PROVIDED.

FIRE
1) FIRE HYDRANTS TO BE INSTALLED PER CITY OF WILMINGTON ORDINANCE AND CFPUA STANDARDS.
2) PARKING AND LANDSCAPING CANNOT BLOCK FIRE HYDRANTS OR FDC'S.
3) FDC'S CAN BE NO FURTHER THAN 40' FROM FIRE DEPARTMENT VEHICLE PLACEMENT.
4) FDC'S CAN BE NO FURTHER THAN 150' FROM A FIRE HYDRANT.
5) SHOW ALL FDC LOCATIONS ON FINAL PLAN.
6) ALL WEATHER ACCESS ROAD MUST BE MAINTAINED AROUND CONSTRUCTION SITE AT ALL TIMES.
7) NEW HYDRANTS SHALL BE BROUGHT INTO SERVICE PRIOR TO COMBUSTIBLE MATERIALS BEING DELIVERED TO THE JOB SITE.
8) HYDRANTS SHALL BE OF SUFFICIENT NUMBERS TO ACCOMMODATE BASE FIRE FLOW REQUIREMENTS OF STRUCTURE.
9) IN ADDITION TO THE STANDARD COMMENTS, ADDITIONAL FIRE PROTECTION AND ACCESSIBILITY REQUIREMENTS MAY BE REQUIRED DUE TO ANY SPECIAL CIRCUMSTANCES CONCERNING THE PROJECT.
10) PRIVATE UNDERGROUND FIRE LINES REQUIRE A SEPARATE UNDERGROUND FIRE LINE PERMIT FROM THE WILMINGTON FIRE AND LIFE SAFETY DIVISION 910-343-0696.
11) ALL ISOLATION VALVES WITHIN THE "HOT BOX" SHALL BE ELECTRICALLY SUPERVISED. PLEASE WORK CLOSELY WITH YOUR FIRE SPRINKLER AND ALARM INSTALLER IN REGARDS TO RUNNING WIRE FOR TAMPER SWITCH.
12) BUILDING CONSTRUCTION TYPE IS 5A.

SITE
1) SITE LIGHTING TO BE PROVIDED BY DUKE ENERGY.

SITE DATA:

PROPERTY OWNER	SERAJ ENTERPRISES, INC.
PROJECT ADDRESS	5001 MARKET STREET
PIN NUMBERS	R04915-001-010-000
AREA NOT IN A FEMA 100-YEAR FLOOD ZONE	
TRACT AREA	193,914 SF (4.45 AC)
DISTURBED AREA	Ac.
ZONING DISTRICT	RB: REGIONAL BUSINESS
SETBACKS REQUIRED	FRONT: 25' REAR: 15' SIDE: 0'
PROPOSED BUILDING SETBACK (VESTIBULE)	FRONT: 66.7' REAR: – SIDE: 124.8'
PROPOSED BUILDING SETBACK (HOTEL)	FRONT: – REAR: 65.9' SIDE: 66.6'
CAMA LAND USE	URBAN
BUILDING USE	HOTEL
PROPOSED BUILDING AREA	SF
BUILDING LOT COVERAGE (53,340/193,914)	27.51%
NUMBER OF BUILDINGS	2
NUMBER OF UNITS	–
BUILDING HEIGHT (HOTEL/VESTIBULE)	40'/20'
NUMBER OF STORIES (HOTEL/VESTIBULE)	4/1
GROSS SF PER FLOOR (HOTEL)	
GROUND FLOOR	13,469 SF
2ND, 3RD & 4TH FLOORS	13,201 SF
GROSS SF PER FLOOR (VESTIBULE)	370 SF
EXISTING IMPERVIOUS AREAS:	
EXISTING BUILDING	38,995 SF
EXISTING ASPHALT	82,878 SF
EXISTING CONCRETE	13,790 SF
EXISTING IMPERVIOUS AREA	135,663 SF (69.96%)
PROPOSED ONSITE IMPERVIOUS AREAS:	
PROPOSED BUILDING (INCLUDING CANOPY & CABANAS)	15,020 SF
PROPOSED ASPHALT & CURBING	10,535 SF
PROPOSED CONCRETE	5,975 SF
EXISTING IMPERVIOUS TO BE REMOVED	-18,590 SF
EXISTING IMPERVIOUS TO REMAIN	117,073 SF
TOTAL ONSITE IMPERVIOUS AREA	148,603 SF (79.63%)
TOTAL OFFSITE IMPERVIOUS AREA	62 SF
PARKING REQUIRED: 1/GUEST ROOM PLUS 50% OF THE REQUIRED SPACES FOR ANY ACCESSORY USES	
1/GUEST ROOM (207 ROOMS)	207
RESTAURANT (1/80 SF MIN x 50% & 1/65 SF MAX x50%) (2000 SF/80x50% & 2000 SF/65x50%)	13-15
BANQUET HALL (1/80 SF MIN x 50% & 1/65 SF MAX x50%) (2575 SF/80x50% & 2575 SF/65x50%)	16-20
TOTAL PARKING REQUIRED	236-242
PARKING PROVIDED (ONSITE)	200
PARKING PROVIDED (OFFSITE)	36
TOTAL PARKING PROVIDED (ONSITE+OFFSITE)	236
HANDICAP SPACES REQUIRED	7
HANDICAP SPACES PROVIDED	7
BICYCLE PARKING REQUIRED	15
BICYCLE PARKING PROPOSED	20
PUBLIC WATER AND SEWER BY CFPUA	
EXISTING WATER FLOW:	13,200 GPD
EXISTING SEWER FLOW:	12,000 GPD
PROPOSED WATER FLOW: (120 GPD PER ROOM x 207 ROOMS x 110%)	27,324 GPD
PROPOSED SEWER FLOW: (120 GPD PER ROOM x 207 ROOMS)	24,840 GPD

LEGEND

- PROPERTY BOUNDARY
- LIGHT POLE
- CURB INLET
- UTILITY POLE
- -OH- OVERHEAD WIRE
- GAS ASSEMBLY
- TRAFFIC BOX
- WATER METER
- DROP INLET
- GUY WIRE
- SANITARY SEWER MANHOLE
- SEPTIC CLEANOUT
- BACKFLOW PREVENTER
- FIRE HYDRANT
- SIGN
- LARGE SIGN
- ELECTRIC APPARATUS
- UTILITY BOX
- IRRIGATION CONTROL VALVE
- SS PROPOSED SEWER
- W PROPOSED WATER
- SD PROPOSED STORM WATER

REVISIONS		
No./Date	Description	By

AUTOTURN EXHIBIT

TRU & TAPESTRY HOTEL
5001 MARKET STREET
WILMINGTON, NORTH CAROLINA

TRIPP ENGINEERING, P.C.
419 Chestnut Street
Wilmington, North Carolina 28401
Phone 910-763-5100
Fax 910-763-5631

© 2014 TRIPP ENGINEERING, P.C.
LICENSE No. C-1427

NORTH CAROLINA PROFESSIONAL ENGINEER SEAL 17374 PHILLIP GREGORY TRIPP

2.5.19

DATE 02-05-19
DESIGN PGT
DRAWN JET

AT1

SHEET 1 OF 1

17068

CITY OF WILMINGTON NORTH CAROLINA
Public Services • Engineering Division
APPROVED STORMWATER MANAGEMENT PLAN
Date: ______________ Permit #________
Signed: ______________________________

Approved Construction Plan	Name	Date
Planning		
Traffic		
Fire		

For each open utility cut of City streets, a $325 permit shall be required from the City prior to occupancy and/or project acceptance.